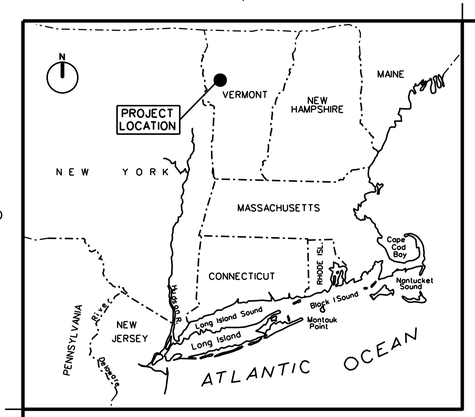

LOCATION PLAN
SCALE IN MILES
60 0 60 120

LAKE CHAMPLAIN WATERSHED
BARTLETT BROOK STORMWATER
IMPROVEMENT PROJECT
LAUREL HILL
IFB #: W912DS-15-B-0014

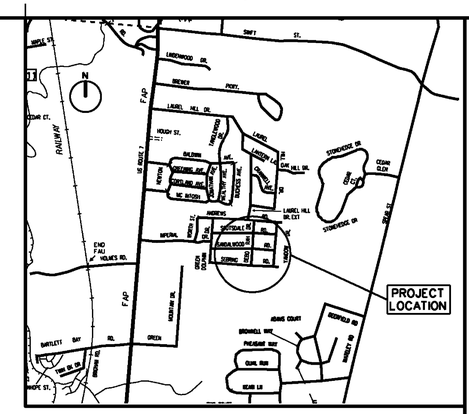

VICINITY MAP
NOT TO SCALE

INDEX TO DRAWINGS

SHEET NO.	SHEET REF. NO.	TITLE
01	G-001	INDEX TO DRAWINGS
02	G-002	GENERAL NOTES
03	RR-001	LOCAL COOPERATION SHEET
04	C-101	EXISTING CONDITIONS AND DEMOLITION SITE PLAN
05	C-102	OVERALL SITE PLAN
06	C-103	STORM DRAIN MAINLINE - SITE PLAN AND PROFILE - STA. 10+00 TO STA. 17+00 (OUTLET TO SANDALWOOD RD)
07	C-104	STORM DRAIN MAINLINE - SITE PLAN AND PROFILE - STA. 16+90 TO STA. 24+50 (SANDALWOOD RD TO ANDREWS AVE)
08	C-105	STORM DRAIN MAINLINE - SITE PLAN AND PROFILE - STA. 24+50 TO STA. 28+42 (ANDREWS AVE)
09	C-106	SEBRING ROAD - SITE PLAN AND PROFILE - STA. 48+50 TO STA. 55+50
10	C-107	SANDALWOOD ROAD - SITE PLAN AND PROFILE - EXTENSION
11	C-108	SCOTTSDALE ROAD - SITE PLAN AND PROFILE - EXTENSION
12	C-501	STORM DRAIN DETAILS
13	C-502	WATER RELOCATION DETAILS
14	C-503	VAULT 1 - PLAN AND SECTIONS
15	C-504	VAULT 2 & VAULT 3 - PLAN AND SECTIONS

US Army Corps of Engineers
New York District

MARK	DESCRIPTION	DATE	APPR.	MARK	DESCRIPTION	DATE	APPR.

U. S. ARMY ENGINEER DISTRICT
NEW YORK
http://www.nan.usace.army.mil

DuBois & King INC.

DESIGNED BY: CJK
DATE: MAY 2015
DWN BY: AS
CKD BY: MTM
SOLICITATION NO.:
SUBMITTED BY: D & K
CONTRACT NO.:
FILE NAME: $P_SHORT_DESIGNS
SIZE: ANSI D
PLOTTED BY: $USERNAME$
PLOT DATE: DD-MMM-YYYY

LAUREL HILL
STORMWATER IMPROVEMENTS
SOUTH BURLINGTION, VERMONT

INDEX TO DRAWINGS

SHEET REFERENCE NUMBER
G-001
SHEET 01 OF 15

MAY 2010 NYD A/E COVER
Plot Date: DD-MMM-YYYY HH:MM
Submitted by: USERNAME
$FILENAME$

MAY 2010 NYD A/E BORDER

GENERAL NOTES

1. THE PURPOSE OF THIS PROJECT IS TO REPLACE EXISTING STORM DRAIN PIPE, AND CONSTRUCT APPROXIMATELY 735 LF OF NEW STORM DRAIN.
2. THE PROJECT OWNER IS THE CITY OF SOUTH BURLINGTON. THE OWNER WILL APPOINT AN ENGINEER TO REPRESENT THE OWNER DURING CONSTRUCTION OF THE PROJECT.
3. TOPOGRAPHY AND THE LOCATION AND ELEVATIONS OF MANHOLES SHOWN ON THE PLANS ARE BASED ON FIELD SURVEY COMPLETED BY DUBOIS & KING AUG 12, 2009 (VERTICAL DATUM: NAVD 88).
4. ENGINEERING PERFORMED BY DuBOIS & KING, INC.. CONTACT PERSON IS MATTHEW MURAWASKI 802-728-3376 x 1454.
5. WRITTEN DIMENSIONS HAVE PRECEDENCE OVER SCALED DIMENSIONS. IN CASE OF CONFLICT BETWEEN THIS PLAN SET AND ANY OTHER DRAWING AND/OR SPECIFICATION, THE ENGINEER SHALL BE NOTIFIED IMMEDIATELY FOR CLARIFICATION.
6. THE CONTRACTOR SHALL BE FAMILIAR WITH THE EXISTING CONDITIONS OF THE SITE AND SURROUNDINGS PRIOR TO BIDDING AND PERFORMING THE WORK.
7. THE CONTRACTOR SHALL BID AND PERFORM THE WORK FROM A COMPLETE SET OF PLANS AND SPECIFICATIONS, AND SHALL NOTIFY THE ENGINEER OF ANY CONFLICTS WITHIN THE CONSTRUCTION DOCUMENTS.
8. THE CONTRACTOR IS RESPONSIBLE FOR THE MEANS AND METHODS OF CONSTRUCTION AND FOR CONDITIONS AT THE SITE. THESE PLANS, PREPARED BY DUBOIS & KING, DO NOT EXTEND TO OR INCLUDE SYSTEMS PERTAINING TO THE SAFETY OF THE CONSTRUCTION CONTRACTOR OR THEIR EMPLOYEES, AGENTS OR REPRESENTATIVES IN THE PERFORMANCE OF THE WORK. THE SEAL OF THE SURVEYOR OR ENGINEER HERE ON DOES NOT EXTEND TO ANY SUCH SAFETY SYSTEMS THAT MAY NOW OR HEREAFTER BE INCORPORATED INTO THESE PLANS. THE CONSTRUCTION CONTRACTOR SHALL PREPARE OR OBTAIN THE APPROPRIATE SAFETY SYSTEMS, WHICH MAY BE REQUIRED BY THE U.S. OCCUPATIONAL SAFETY AND HEALTH ADMINISTRATION (OSHA) AND/OR LOCAL REGULATIONS.
9. THE CONTRACTOR SHALL BID AND PERFORM THE WORK IN ACCORDANCE WITH ALL LOCAL, STATE, AND NATIONAL CODES, SPECIFICATIONS, REGULATIONS, STANDARDS, AND DETAILS.
10. SUBMIT SHOP DRAWINGS AND PRODUCT LITERATURE (MANUFACTURERS LITERATURE, CUT SHEETS, APPLICATION PROCEDURES, ETC.) FOR ALL PRODUCTS FOR USE IN THE PROJECT, FOR APPROVAL BY THE ENGINEER.
11. NO DEVIATION OR DEPARTURE FROM THE DESIGN INTENT PRESENTED IN THE CONTRACT DOCUMENTS (PLANS AND SPECIFICATIONS) WILL BE ALLOWED UNLESS AUTHORIZED BY THE ENGINEER.
12. NO BURNING OR ON-SITE DISPOSAL OF TREES, BRUSH, STUMPS OR OTHER CONSTRUCTION DERBIES IS PERMITTED. CONTRACTOR SHALL REMOVE SUCH MATERIAL AND DISPOSE OF THEM OFF-SITE IN A LEGAL MANNER.

CONSTRUCTION NOTES

1. LOCATE STAGING AREAS AWAY FROM SENSITIVE AREAS INCLUDING WETLANDS AND STREAM BUFFERS.
2. THE CONTRACTOR IS RESPONSIBLE FOR ALL TEMPORARY SHORING, WATER DIVERSION, AND DEWATERING REQUIREMENTS NEEDED FOR THE PROJECT.
3. ALL WORK SHALL TAKE PLACE IN THE DRY.
4. THE CONTRACTOR SHALL MEET THE REQUIREMENTS OUTLINED IN THE STATE OF VERMONT LOW RISK SITE LAND BOOK FOR EROSION PREVENTION AND SEDIMENT CONTROL.

MEETINGS AND SUBMITTALS

1. THE CONTRACTOR MUST PARTICIPATE IN AN ON-SITE PRE-CONSTRUCTION CONFERENCE.
2. THE CONTRACTOR MUST SUBMIT AN UPDATED ANTICIPATED WORK SCHEDULE TO THE ENGINEER EACH WEEK.
3. THE CONTRACTOR MUST SUBMIT A CONTROL OF WATER PLAN TO THE ENGINEER FOR APPROVAL PRIOR TO CONSTRUCTION.
4. THE CONTRACTOR MUST SUBMIT TO THE ENGINEER MATERIAL SLIPS FOR ALL MATERIALS AND ITEMS USED ON THE PROJECT PER THE SPECIFICATIONS.
5. THE CONTRACTOR MUST PROVIDE THE ENGINEER THE OPPORTUNITY TO INSPECT, WITH 48-HOUR PRIOR NOTICE.

PERMITS

1. THE FOLLOWING PERMIT IF REQUIRED, IS BEING SECURED BY THE OWNER FOR THIS PROJECT:

   - STORMWATER CONSTRUCTION GENERAL

2. THE CONTRACTOR IS RESPONSIBLE FOR FAMILIARIZING HIMSELF WITH THE REQUIREMENTS OF THESE PERMITS PRIOR TO BIDDING, AND FOR COMPLYING WITH THEM DURING CONSTRUCTION.
3. THE CONTRACTOR IS RESPONSIBLE FOR OBTAINING AND COMPLYING WITH AN VTDES PERMIT FROM THE US. ENVIRONMENTAL PROTECTION AGENCY.

UTILITIES

1. THE CONTRACTOR IS RESPONSIBLE FOR VERIFYING AND DETERMINING THE LOCATION, SIZE, AND ELEVATION OF ALL UTILITIES PRIOR TO THE START OF CONSTRUCTION. THE CONTRACTOR MAY CONTACT THE SOUTH BURLINGTON DEPARTMENT OF PUBLIC WORKS (802-658-7961) FOR QUESTIONS RELATED TO THE UTILITIES.
2. THE CONTRACTOR IS RESPONSIBLE FOR VERIFYING AND DETERMINING ALL UTILITIES (ABOVE AND BELOW GROUND) WITHIN THE PROJECT LIMITS, AND TO TAKE THE NECESSARY PRECAUTIONS TO PROTECT UTILITIES DURING CONSTRUCTION. CONTACT DIG-SAFE AT 1-800-DIG-SAFE (WWW.DIGSAFE.COM).
3. THE OWNER SHALL BE NOTIFIED IN WRITING OF ANY UTILITIES FOUND INTERFERING WITH THE PROPOSED CONSTRUCTION, AND APPROPRIATE REMEDIAL ACTION SHALL BE DETERMINED AND AGREED UPON BY THE ENGINEER BEFORE PROCEEDING WITH THE WORK.

STAGING AND STOCK PILE AREAS

1. THE FOLLOWING LOCATIONS ON CITY PROPERTY MAY BE AVAILABLE TO THE CONTRACTOR FOR STAGING OF SUPPLIES AND EQUIPMENT DURING CONSTRUCTION. THE CITY MAY BE BIDDING MULTIPLE PROJECTS AND AS SUCH THE CITY WILL CLARIFY WHICH SITE OR SITES WILL BE AVAILABLE FOR THIS PROJECT DURING THE BID PERIOD.
   A. EAST END OF SEBRING ROAD (EAST OF LAST DRIVEWAY).
   B. APPROXIMATELY 1/3 ACRE IN THE OPEN GRASSED AREA IN SZYMANSKI PARK SOUTHWEST OF THE BASKETBALL COURT. SAFE PEDESTRIAN ACCESS TO PARK FACILITIES INCLUDING PLAYGROUND, BASKETBALL COURT, TENNIS COURTS, AND RECREATIONAL PATHS MUST BE MAINTAINED.
   C. UP TO HALF OF THE SZYMANSKI PARK PARKING LOT AT THE EASTERN END OF ANDREWS AVENUE. PEDESTRIAN AND EMERGENCY VEHICLE ACCESS TO SZYMANSKI PARK FROM ANDREWS AVENUE MUST BE MAINTAINED.
2. THE CONTRACTOR SHALL PROVIDE FENCING OR SUITABLE DEMARCATION TO PREVENT INADVERTENT PEDESTRIAN ACCESS TO THE STAGING AREA.
3. THE CONTRACTOR WILL BE EXPECTED TO COORDINATE WITH THE CITY TO FINALIZE LOCATIONS OF STAGING AREAS ON CITY PROPERTY PRIOR TO THE START OF CONSTRUCTION.
4. THE CONTRACTOR MAY IDENTIFY AND SECURE THE USE OF ADDITIONAL STAGING AREAS ON NON-CITY PROPERTY.

RESTORATION OF SURFACES

1. THE CONTRACTOR SHALL APPLY A COURSE BED OF CRUSHED GRAVEL TO THE CONSTRUCTION ACCESS DRIVES AND NON PAVED STAGING AREAS AS DIRECTED BY THE ENGINEER TO PREVENT RUTTING, EROSION, AND TRACKING OF MATERIAL OFFSITE. AT THE COMPLETION OF WORK, THE CONTRACTOR MUST REMOVE THE GRAVEL AND REGRADE, SEED, FERTILIZE, AND MULCH THE DISTURBED AREA.
2. AT THE COMPLETION OF WORK, THE CONTRACTOR MUST RESTORE ACCESS, STAGING, AND WORK AREAS TO PRE-CONSTRUCTION CONDITION. RESTORATION MAY INCLUDE PLACEMENT OF PAVEMENT ON EXISTING DRIVES AND / OR APPLICATION OF TOPSOIL, GRASS SEED, FERTILIZER, AND MULCH TO AFFECTED LAWN AREAS.

EROSION PREVENTION AND SEDIMENT CONTROL NOTES

1. STANDARDS IN "LOW RISK SITE HANDBOOK FOR EROSION PREVENTION AND SEDIMENT CONTROL" BY VT ENVIRONMENTAL DEPARTMENT OF ENVIRONMENTAL CONSERVATION, SERVE AS THE REQUIRED EROSION PREVENTION AND SEDIMENT CONTROL PLAN FOR THE SITE. THE CONTRACTOR SHALL BE FAMILIAR WITH THE STANDARDS AND SPECIFICATIONS IN THIS PUBLICATION AND SHALL IMPLEMENT THE APPLICABLE MEASURES AS SPECIFIED.

PROTECTION OF TREES

1. THE CONTRACTOR SHALL COORDINATE WITH THE CITY ARBORIST PRIOR TO PRUNING BRANCHES OR ROOTS OF ANY TREES LOCATED OUTSIDE THE CITY'S PERMANENT EASEMENTS. THIS REQUIREMENT APPLIES TO ALL TREES ADJACENT TO THE EASEMENTS WHETHER OR NOT EXPLICITELY NOTED ELSEWHERE ON THESE PLANS.

US Army Corps of Engineers
New York District

MARK	DESCRIPTION	DATE	APPR.

MARK	DESCRIPTION	DATE	APPR.

U. S. ARMY ENGINEER DISTRICT
NEW YORK
http://www.nan.usace.army.mil

DESIGNED BY: CJK | DATE: MAY 2015
DWN BY: AS | CKD BY: MTM | SOLICITATION NO.:
SUBMITTED BY: D & K | CONTRACT NO.:
FILE NAME: ...\DGN\120808LH_G002.dgn
SIZE: ANSI D | PLOTTED BY: DUBOIS & KING | PLOT DATE: 5/11/2015

DuBois & King inc.

LAUREL HILL
STORM WATER IMPROVEMENTS
SOUTH BURLINGTON, VERMONT

GENERAL NOTES

SHEET REFERENCE NUMBER
G-002
SHEET 02 OF 15

Submitted by: DUBOIS & KING Plot Date: 5/11/2015 2:12:54 PM
...\DGN\120808LH_G002.dgn

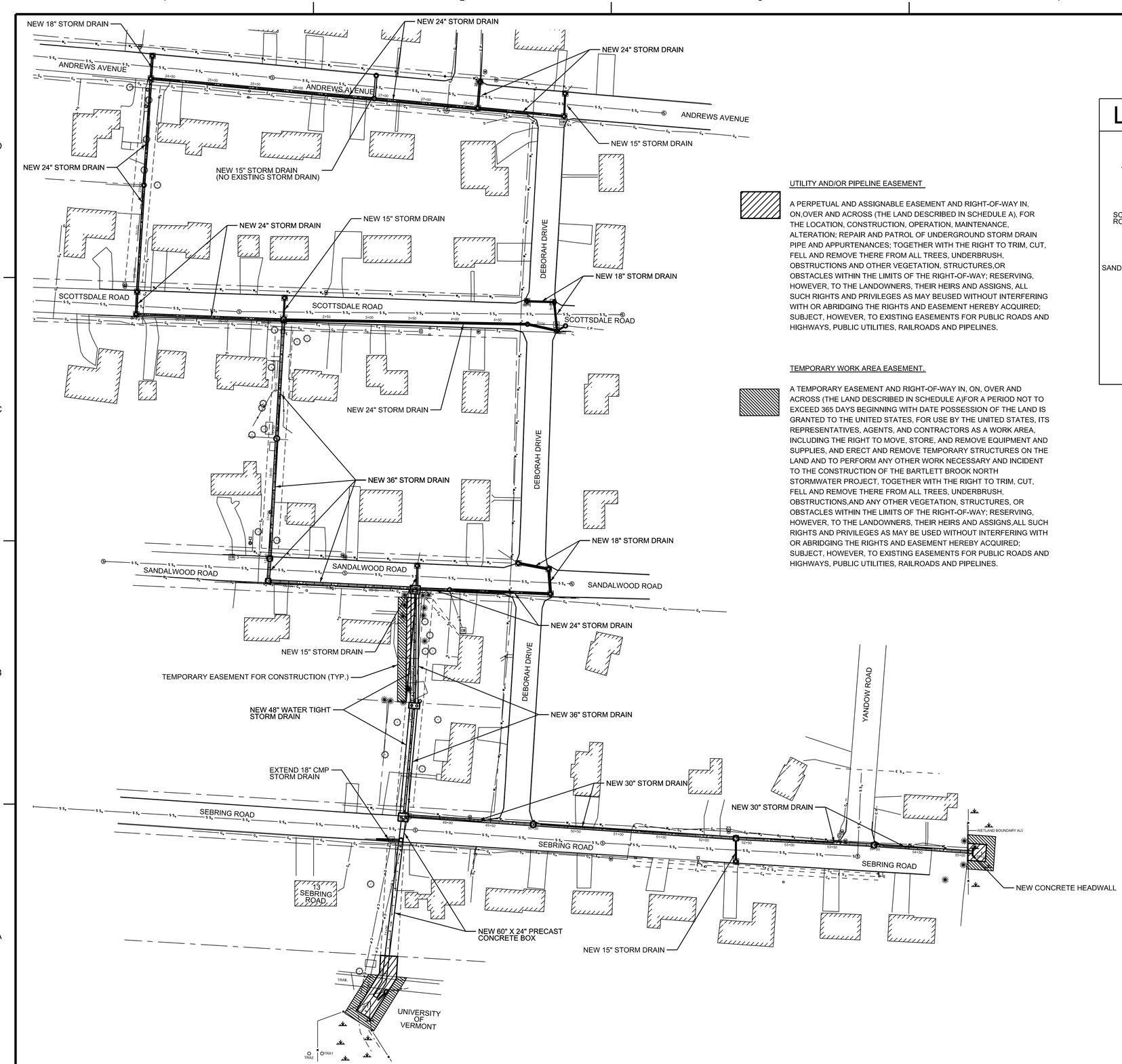

UTILITY AND/OR PIPELINE EASEMENT

A PERPETUAL AND ASSIGNABLE EASEMENT AND RIGHT-OF-WAY IN, ON,OVER AND ACROSS (THE LAND DESCRIBED IN SCHEDULE A), FOR THE LOCATION, CONSTRUCTION, OPERATION, MAINTENANCE, ALTERATION; REPAIR AND PATROL OF UNDERGROUND STORM DRAIN PIPE AND APPURTENANCES; TOGETHER WITH THE RIGHT TO TRIM, CUT, FELL AND REMOVE THERE FROM ALL TREES, UNDERBRUSH, OBSTRUCTIONS AND OTHER VEGETATION, STRUCTURES,OR OBSTACLES WITHIN THE LIMITS OF THE RIGHT-OF-WAY; RESERVING, HOWEVER, TO THE LANDOWNERS, THEIR HEIRS AND ASSIGNS, ALL SUCH RIGHTS AND PRIVILEGES AS MAY BEUSED WITHOUT INTERFERING WITH OR ABRIDGING THE RIGHTS AND EASEMENT HEREBY ACQUIRED; SUBJECT, HOWEVER, TO EXISTING EASEMENTS FOR PUBLIC ROADS AND HIGHWAYS, PUBLIC UTILITIES, RAILROADS AND PIPELINES.

TEMPORARY WORK AREA EASEMENT.

A TEMPORARY EASEMENT AND RIGHT-OF-WAY IN, ON, OVER AND ACROSS (THE LAND DESCRIBED IN SCHEDULE A)FOR A PERIOD NOT TO EXCEED 365 DAYS BEGINNING WITH DATE POSSESSION OF THE LAND IS GRANTED TO THE UNITED STATES, FOR USE BY THE UNITED STATES, ITS REPRESENTATIVES, AGENTS, AND CONTRACTORS AS A WORK AREA, INCLUDING THE RIGHT TO MOVE, STORE, AND REMOVE EQUIPMENT AND SUPPLIES, AND ERECT AND REMOVE TEMPORARY STRUCTURES ON THE LAND AND TO PERFORM ANY OTHER WORK NECESSARY AND INCIDENT TO THE CONSTRUCTION OF THE BARTLETT BROOK NORTH STORMWATER PROJECT, TOGETHER WITH THE RIGHT TO TRIM, CUT, FELL AND REMOVE THERE FROM ALL TREES, UNDERBRUSH, OBSTRUCTIONS,AND ANY OTHER VEGETATION, STRUCTURES, OR OBSTACLES WITHIN THE LIMITS OF THE RIGHT-OF-WAY; RESERVING, HOWEVER, TO THE LANDOWNERS, THEIR HEIRS AND ASSIGNS,ALL SUCH RIGHTS AND PRIVILEGES AS MAY BE USED WITHOUT INTERFERING WITH OR ABRIDGING THE RIGHTS AND EASEMENT HEREBY ACQUIRED; SUBJECT, HOWEVER, TO EXISTING EASEMENTS FOR PUBLIC ROADS AND HIGHWAYS, PUBLIC UTILITIES, RAILROADS AND PIPELINES.

LAUREL HILL KEY PLAN

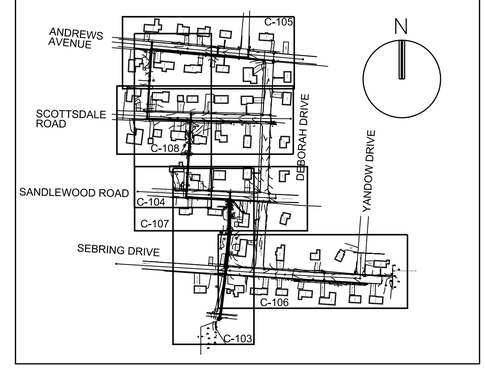

N

LEGEND
(EXISTING)

- WETLANDS
- 6" APPLE, 20" PINE — TREES
- LIGHT POLE
- SEWER MANHOLE
- CATCH BASIN
- WATER SHUT OFF
- GAS SHUT OFF
- ELECTRICAL BOX
- HORIZONTAL VERTICAL CONTROL
- BM EL. 221.46 — BENCHMARK
- EDGE OF PAVEMENT
- SEWER MAIN
- STORM DRAIN
- WATER MAIN
- UNDERGROUND COMMUNICATIONS
- OVERHEAD ELECTRICAL
- BURRIED ELECTRICAL
- UNDERGROUND NATURAL GAS
- FENCE
- WETLAND BOUNDARY
- PROPERTY BOUNDARY
- RIGHT OF WAY
- TEMPORARY EASEMENT
- UTILITY/PIPELINE EASEMENT

OVERALL REAL ESTATE SITE PLAN

60' 30' 0 60'

SCALE: 1"= 60'-0"

US Army Corps
of Engineers
New York District

MARK	DESCRIPTION	DATE	APPR.	MARK	DESCRIPTION	DATE	APPR.

DESIGNED BY: CJK | DATE: MAY 2015
DWN BY: AS | CKD BY: MTM | SOLICITATION NO.:
SUBMITTED BY: D & K | CONTRACT NO.:
FILE NAME: ...\120808LH_C-102realestate.dgn
SIZE: ANSI D | PLOTTED BY: DUBOIS & KING | PLOT DATE: 5/20/2015

U. S. ARMY ENGINEER DISTRICT
NEW YORK
http://www.nan.usace.army.mil

DuBois & King inc.

LAUREL HILL
STORM WATER IMPROVEMENTS
SOUTH BURLINGTON, VERMONT

LOCAL COOPERATION SHEET

SHEET
REFERENCE
NUMBER
RR-001

SHEET 03 OF 15

MAY 2010 NYD A/E BORDER

Submitted by: DUBOIS & KING
...\120808LH_C-102realestate.dgn
Plot Date: 5/20/2015 9:59:37 AM

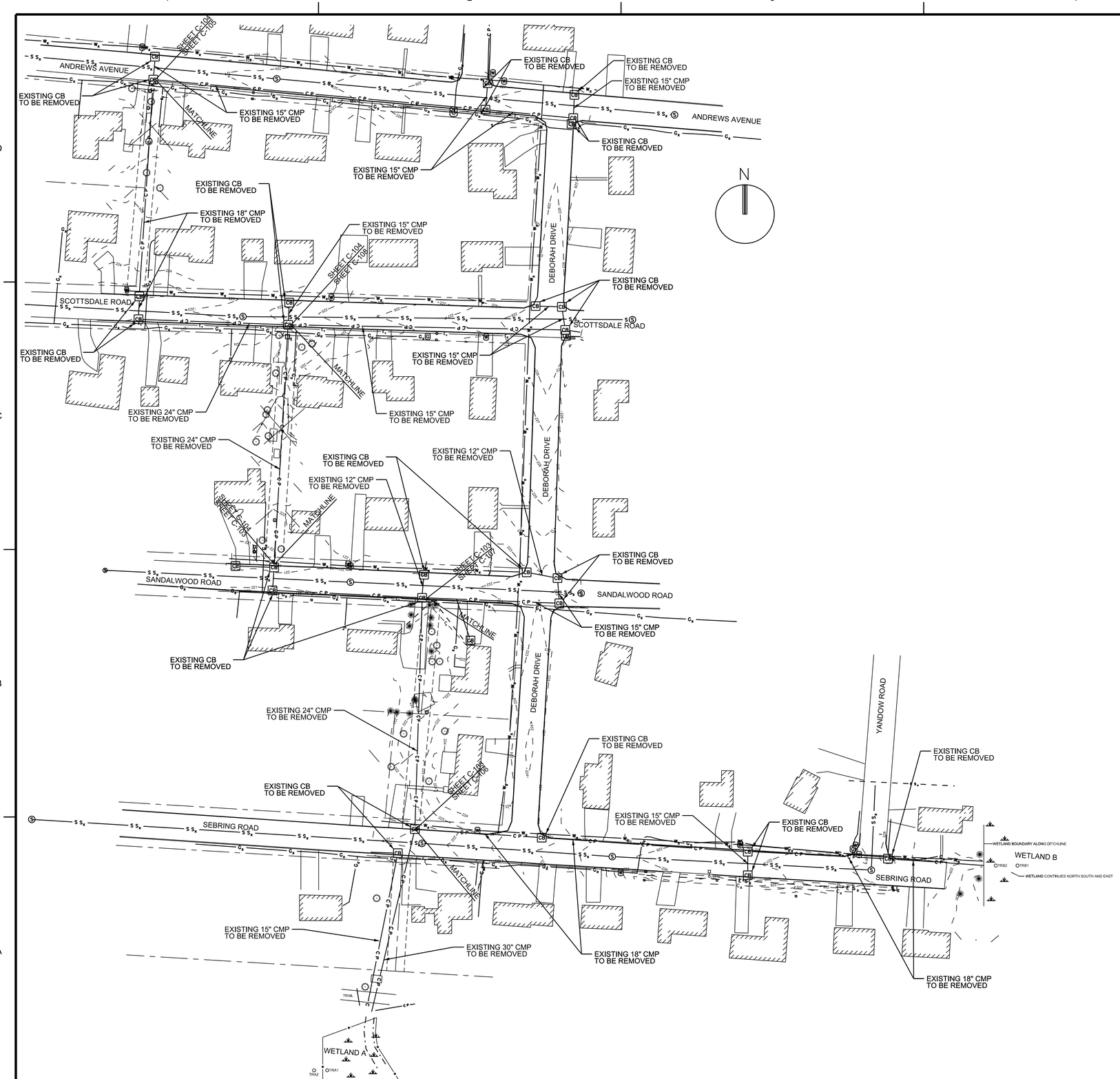

LEGEND (EXISTING)

- WETLANDS
- 6" APPLE / 20" PINE — TREES
- LIGHT POLE
- SEWER MANHOLE
- CATCH BASIN
- WATER SHUT OFF
- GAS SHUT OFF
- ELECTRICAL BOX
- HORIZONTAL VERTICAL CONTROL
- BM EL. 221.46 — BENCHMARK
- EDGE OF PAVEMENT
- SEWER MAIN
- STORM DRAIN
- WATER MAIN
- UNDERGROUND COMMUNICATIONS
- OVERHEAD ELECTRICAL
- BURRIED ELECTRICAL
- UNDERGROUND NATURAL GAS
- FENCE
- WETLAND BOUNDARY
- PROPERTY BOUNDARY
- RIGHT OF WAY

EXISTING CONDITIONS AND DEMOLITION SITE PLAN

60' 30' 0 60'

SCALE: 1"= 60'-0"

US Army Corps of Engineers New York District

MARK	DESCRIPTION	DATE	APPR.	MARK	DESCRIPTION	DATE	APPR.

U. S. ARMY ENGINEER DISTRICT NEW YORK
http://www.nan.usace.army.mil

DuBois & King inc.

DESIGNED BY: CJK | DATE: MAY 2015
DWN BY: AS | CKD BY: MTM | SOLICITATION NO.:
SUBMITTED BY: D & K | CONTRACT NO.:
FILE NAME: ...\DGN\120808LH_C-101.dgn
SIZE: ANSI D | PLOTTED BY: DUBOIS & KING | PLOT DATE: 5/11/2015

LAUREL HILL
STORM WATER IMPROVEMENTS
SOUTH BURLINGTON, VERMONT

EXISTING CONDITIONS & DEMOLITION PLAN

SHEET REFERENCE NUMBER
C-101
SHEET 04 OF 15

MAY 2010 NYD A/E BORDER

Submitted by: DUBOIS & KING Plot Date: 5/11/2015 2:13:39 PM
...\DGN\120808LH_C-101.dgn

MAY 2010 NYD A/E BORDER

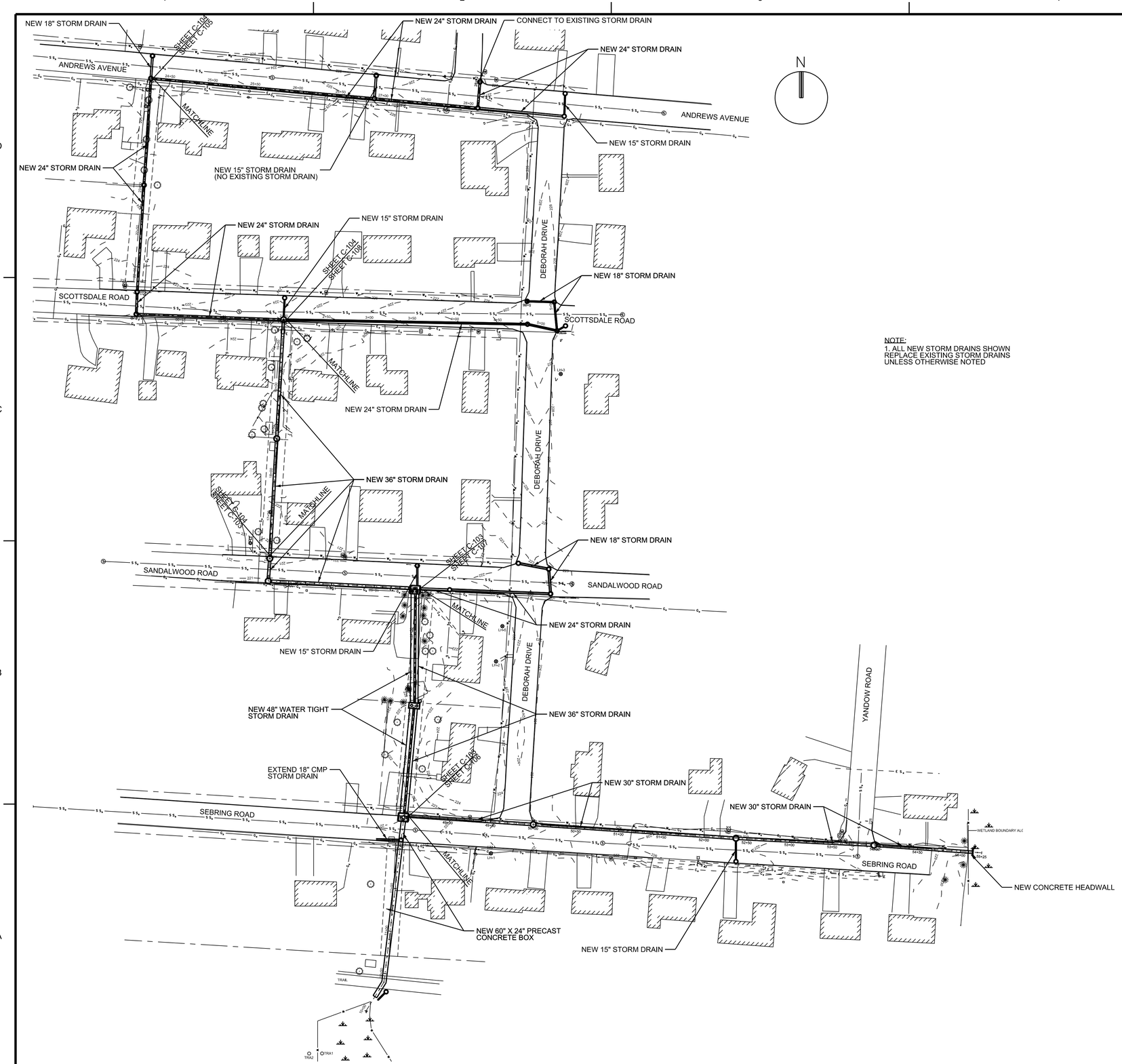

NOTE:
1. ALL NEW STORM DRAINS SHOWN REPLACE EXISTING STORM DRAINS UNLESS OTHERWISE NOTED

LEGEND
(EXISTING)

- WETLANDS
- 6" APPLE, 20" PINE — TREES
- LIGHT POLE
- SEWER MANHOLE
- CATCH BASIN
- WATER SHUT OFF
- GAS SHUT OFF
- ELECTRICAL BOX
- HORIZONTAL VERTICAL CONTROL
- BM EL: 221.46 — BENCHMARK
- EDGE OF PAVEMENT
- SEWER MAIN
- STORM DRAIN
- WATER MAIN
- UNDERGROUND COMMUNICATIONS
- OVERHEAD ELECTRICAL
- BURRIED ELECTRICAL
- UNDERGROUND NATURAL GAS
- FENCE
- WETLAND BOUNDARY
- PROPERTY BOUNDARY
- RIGHT OF WAY
- LH-1 — SOIL BORING

OVERALL SITE PLAN

60' 30' 0 60'

SCALE: 1"= 60'-0"

US Army Corps of Engineers
New York District

MARK	DESCRIPTION	DATE	APPR.	MARK	DESCRIPTION	DATE	APPR.

DESIGNED BY: CJK | DATE: MAY 2015
DWN BY: AS | CKD BY: MTM | SOLICITATION NO.:
SUBMITTED BY: D & K | CONTRACT NO.:
FILE NAME: ...\DGN\120808LH_C-102.dgn
SIZE: ANSI D | PLOTTED BY: DUBOIS & KING | PLOT DATE: 5/11/2015

U. S. ARMY ENGINEER DISTRICT
NEW YORK
http://www.nan.usace.army.mil

DuBois & King inc.

LAUREL HILL
STORM WATER IMPROVEMENTS
SOUTH BURLINGTON, VERMONT

OVERALL SITE PLAN

SHEET REFERENCE NUMBER
C-102
SHEET 05 OF 15

Submitted by: DUBOIS & KING
...\DGN\120808LH_C-102.dgn
Plot Date: 5/11/2015 2:14:28 PM

MAY 2010 NYD A/E BORDER

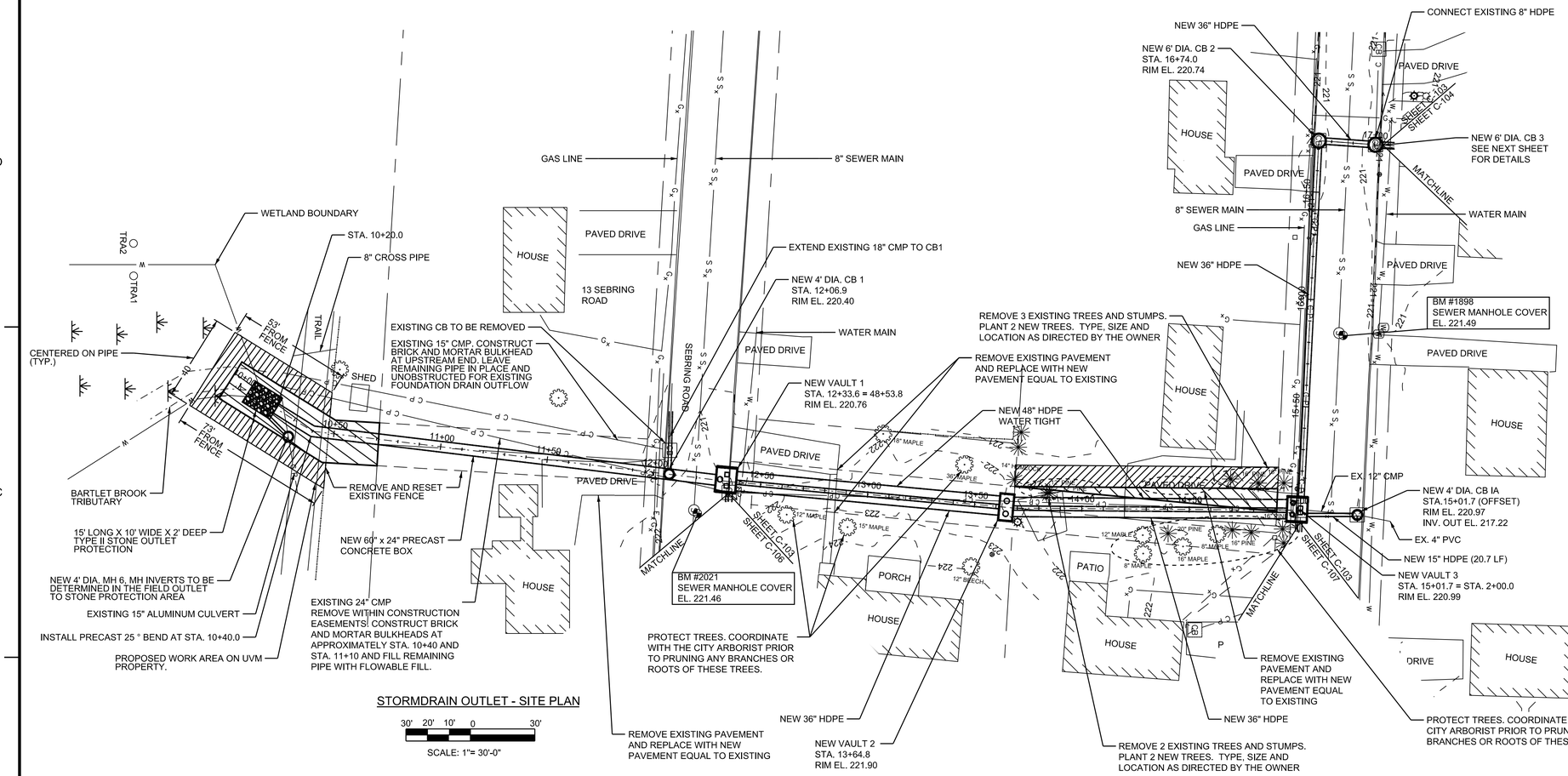

STORMDRAIN OUTLET - SITE PLAN

30' 20' 10' 0 30'

SCALE: 1"= 30'-0"

LEGEND (EXISTING)

- WETLANDS
- 6" APPLE, 20" PINE — TREES
- LIGHT POLE
- SEWER MANHOLE
- CB — CATCH BASIN
- W — WATER SHUT OFF
- GAS SHUT OFF
- ELECTRICAL BOX
- HORIZONTAL VERTICAL CONTROL
- BM EL. 221.46 — BENCHMARK
- EDGE OF PAVEMENT
- S S_x — SEWER MAIN
- C P — STORM DRAIN
- W_x — WATER MAIN
- C_x — UNDERGROUND COMMUNICATIONS
- E_x — OVERHEAD ELECTRICAL
- E S_x — BURRIED ELECTRICAL
- G_x — UNDERGROUND NATURAL GAS
- FENCE
- W — WETLAND BOUNDARY
- PROPERTY BOUNDARY
- RIGHT OF WAY

SITE PLAN

30' 20' 10' 0 30'

SCALE: 1"= 30'-0"

NOTE:

1. UNKNOWN NUMBER AND LOCATION OF BASEMENT DRAIN LINES EXIST. CONTRACTOR TO TIE BASEMENT DRAINS TO STORM DRAINAGE STRUCTURES, SEE STORM DRAIN MANHOLE DETAIL.

2. CONTRACTOR SHALL COORDINATE WITH THE CITY ARBORIST PRIOR TO PRUNING ANY BRANCHES OR ROOTS IN PROXIMITY OF THE WORK AREA.

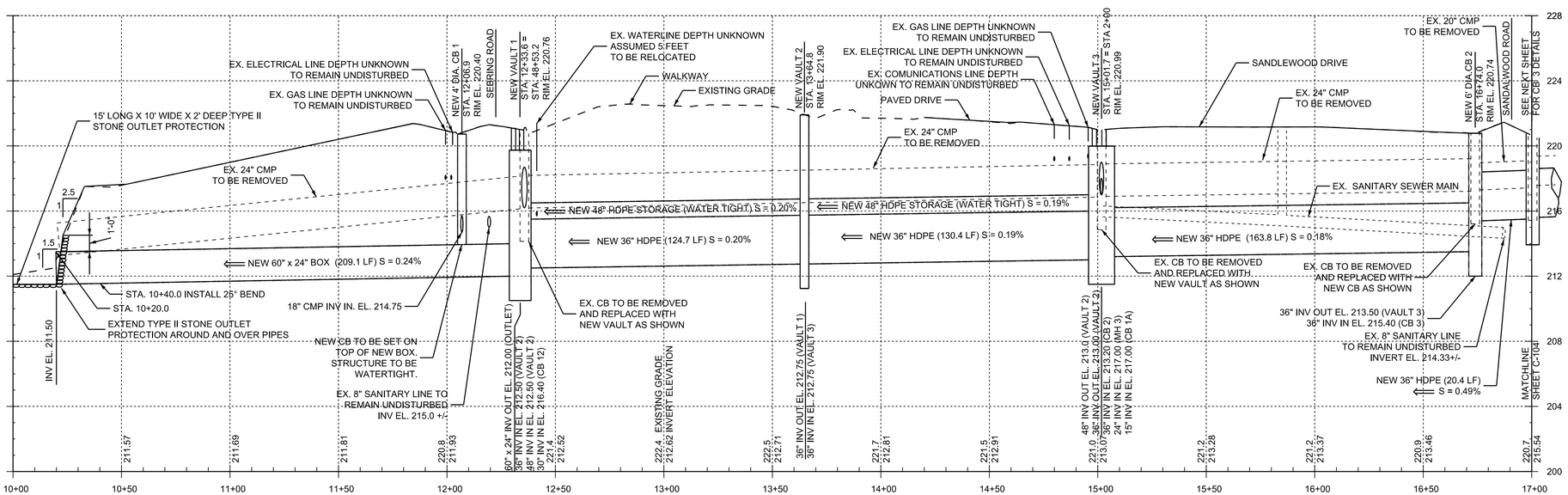

PROFILE

HORIZONTAL SCALE: 1"= 30'-0"
VERTICAL SCALE: 1"= 4'-0"

30' 20' 10' 0 30'

NOTE: PIPE LENTHS ARE PROVIDED FOR GENERAL INFORMATION. PIPE LENGTHS SHALL BE FIELD VERIFIED BASED ON ACTUAL STRUCTURE PLACEMENT

US Army Corps of Engineers
New York District

MARK	DESCRIPTION	DATE	APPR.	MARK	DESCRIPTION	DATE	APPR.

DESIGNED BY: CJK | DATE: MAY 2015
DWN BY: AS | CKD BY: MTM | SOLICITATION NO.:
SUBMITTED BY: D & K | CONTRACT NO.:
FILE NAME: ...\DGN\120808LH_C-103.dgn
SIZE: ANSI D | PLOTTED BY: DUBOIS & KING | PLOT DATE: 5/11/2015

U.S. ARMY ENGINEER DISTRICT NEW YORK
http://www.nan.usace.army.mil

DuBois & King inc.

LAUREL HILL
STORM WATER IMPROVEMENTS
SOUTH BURLINGTON, VERMONT

STORM DRAIN MAINLINE
SITE PLAN AND PROFILE
STA. 10+00 TO STA. 17+00

SHEET REFERENCE NUMBER
C-103
SHEET 08 OF 15

Submitted by: DUBOIS & KING
...\DGN\120808LH_C-103.dgn
Plot Date: 5/11/2015 2:16:10 PM

MAY 2010 NYD A/E BORDER

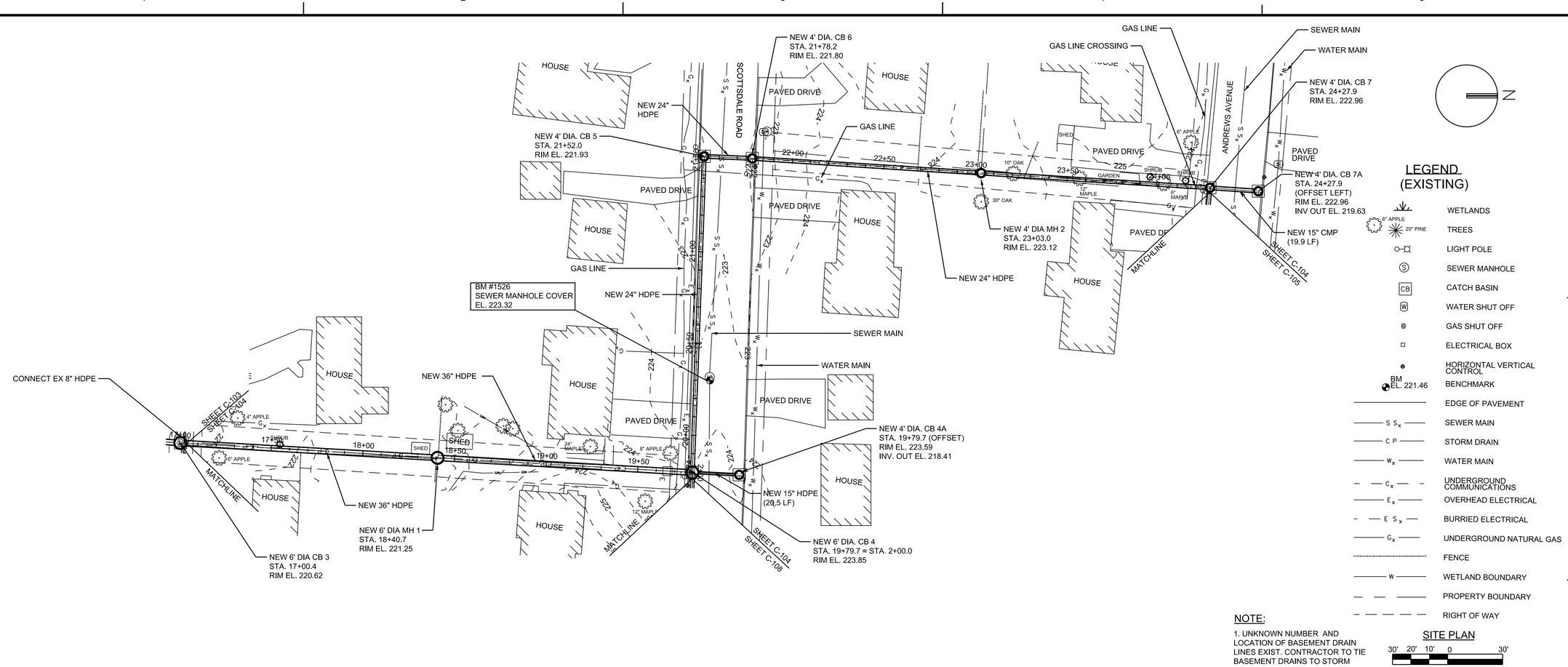

LEGEND (EXISTING)

- WETLANDS
- TREES
- LIGHT POLE
- SEWER MANHOLE
- CATCH BASIN
- WATER SHUT OFF
- GAS SHUT OFF
- ELECTRICAL BOX
- HORIZONTAL VERTICAL CONTROL
- BM EL. 221.46 — BENCHMARK
- EDGE OF PAVEMENT
- S S$_x$ — SEWER MAIN
- C P — STORM DRAIN
- W$_x$ — WATER MAIN
- C$_x$ — UNDERGROUND COMMUNICATIONS
- E$_x$ — OVERHEAD ELECTRICAL
- E S$_x$ — BURRIED ELECTRICAL
- G$_x$ — UNDERGROUND NATURAL GAS
- FENCE
- W — WETLAND BOUNDARY
- PROPERTY BOUNDARY
- RIGHT OF WAY

NOTE:

1. UNKNOWN NUMBER AND LOCATION OF BASEMENT DRAIN LINES EXIST. CONTRACTOR TO TIE BASEMENT DRAINS TO STORM DRAINAGE STRUCTURES, SEE STORM DRAIN MANHOLE DETAIL

SITE PLAN

30' 20' 10' 0 30'

SCALE: 1"= 30'-0"

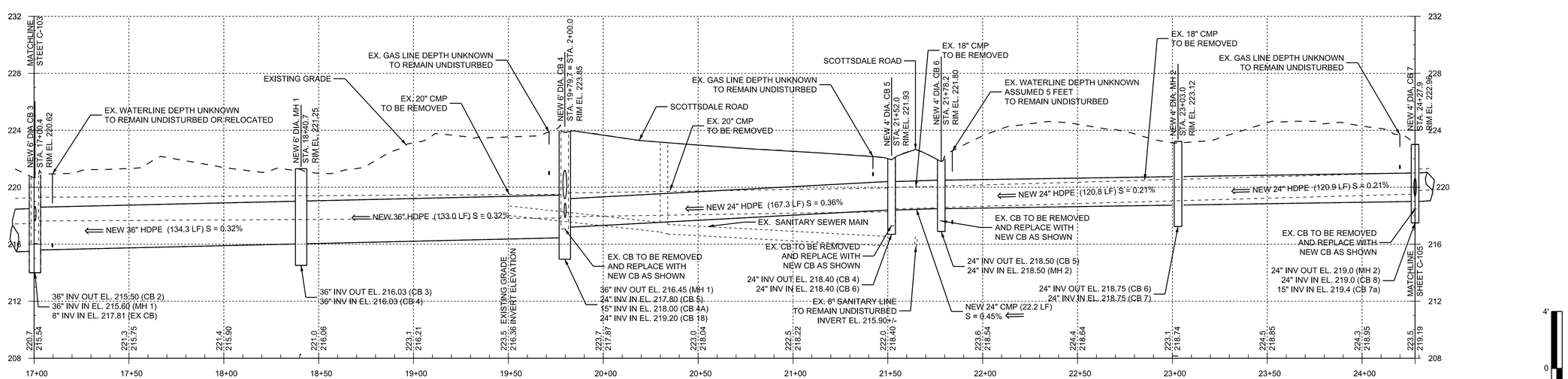

NOTE: PIPE LENTHS ARE PROVIDED FOR GENERAL INFORMATION. PIPE LENGTHS SHALL BE FIELD VERIFIED BASED ON ACTURAL STRUCTURE PLACEMENT

PROFILE

HORIZONTAL SCALE: 1"= 30'-0"

VERTICAL SCALE: 1"= 4'-0"

30' 20' 10' 0 30'

4' 0 1' 2' 3' 4'

US Army Corps of Engineers New York District

MARK	DESCRIPTION	DATE	APPR.	MARK	DESCRIPTION	DATE	APPR.

DESIGNED BY: CJK | DATE: MAY 2015 | SOLICITATION NO.:
DWN BY: AS | CKD BY: MTM | CONTRACT NO.:
SUBMITTED BY: D & K
FILE NAME: ...\DGN\120808LH_C-104.dgn
SIZE: ANSI D | PLOTTED BY: DUBOIS & KING | PLOT DATE: 5/11/2015

U. S. ARMY ENGINEER DISTRICT NEW YORK
http://www.nan.usace.army.mil

DuBois & King inc.

LAUREL HILL
STORM WATER IMPROVEMENTS
SOUTH BURLINGTON, VERMONT

STORMDRAIN MAINLINE
SITE PLAN AND PROFILE
STA. 16+90 TO STA. 24+50

SHEET REFERENCE NUMBER
C-104
SHEET 07 OF 15

Submitted by: DUBOIS & KING
...\DGN\120808LH_C-104.dgn
Plot Date: 5/11/2015 2:16:52 PM

MAY 2010 NYD A/E BORDER

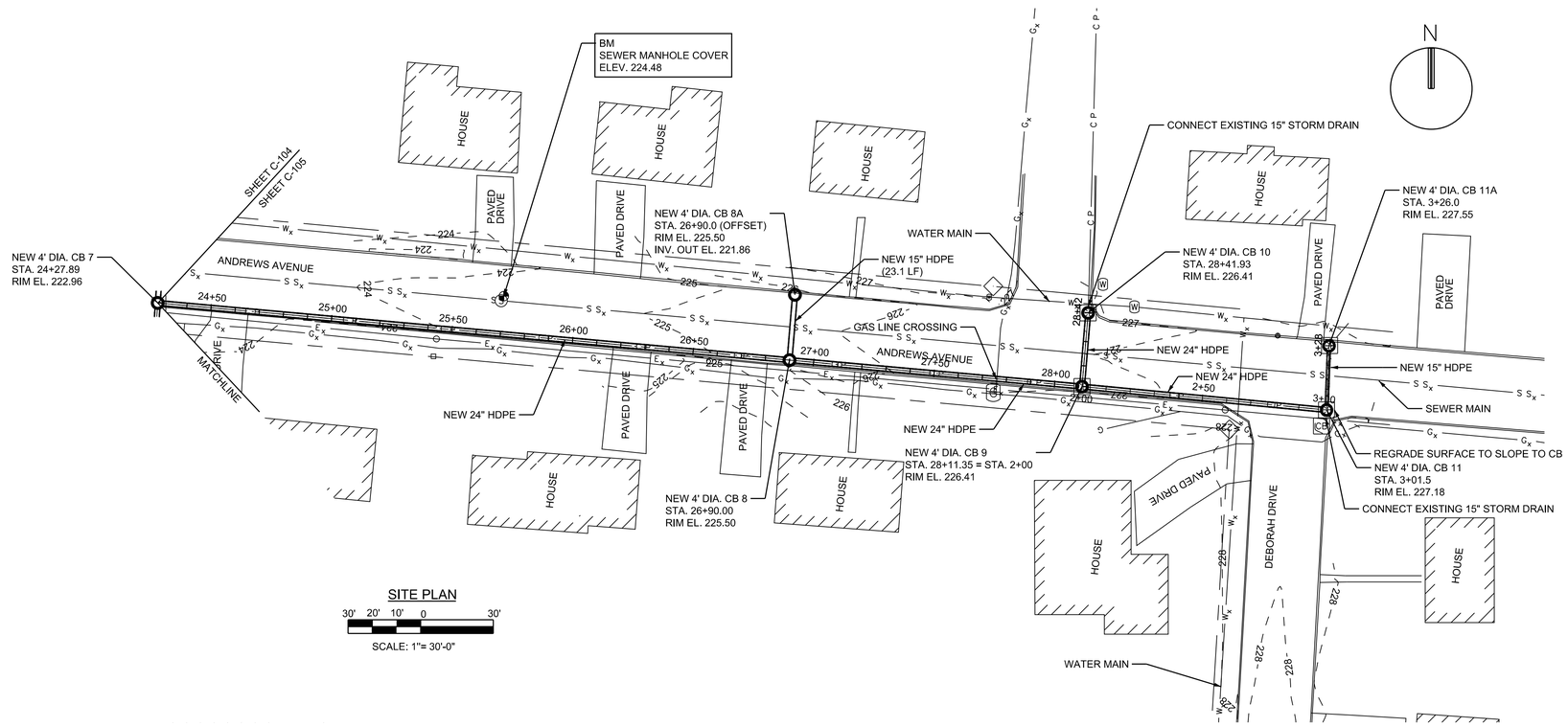

SITE PLAN

30' 20' 10' 0 30'

SCALE: 1"= 30'-0"

LEGEND (EXISTING)

- WETLANDS
- 6" APPLE, 20" PINE — TREES
- LIGHT POLE
- SEWER MANHOLE
- CATCH BASIN
- WATER SHUT OFF
- GAS SHUT OFF
- ELECTRICAL BOX
- HORIZONTAL VERTICAL CONTROL
- BM EL. 221.46 — BENCHMARK
- EDGE OF PAVEMENT
- SEWER MAIN
- STORM DRAIN
- WATER MAIN
- UNDERGROUND COMMUNICATIONS
- OVERHEAD ELECTRICAL
- BURRIED ELECTRICAL
- UNDERGROUND NATURAL GAS
- FENCE
- WETLAND BOUNDARY
- PROPERTY BOUNDARY
- RIGHT OF WAY

NOTE:

1. UNKNOWN NUMBER AND LOCATION OF BASEMENT DRAIN LINES EXIST. CONTRACTOR TO TIE BASEMENT DRAINS TO STORM DRAINAGE STRUCTURES, SEE STORM DRAIN MANHOLE DETAIL

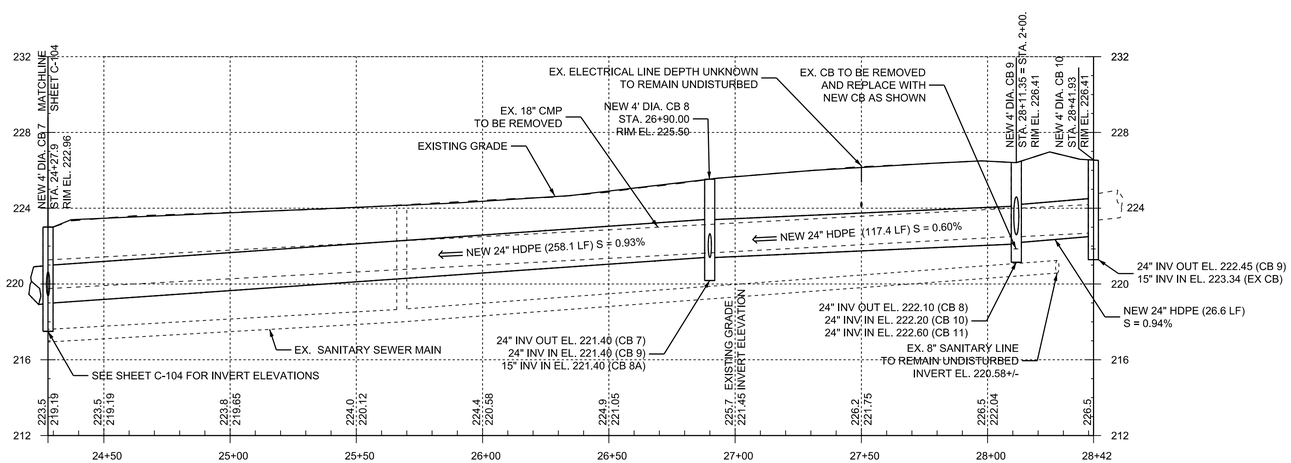

MAIN

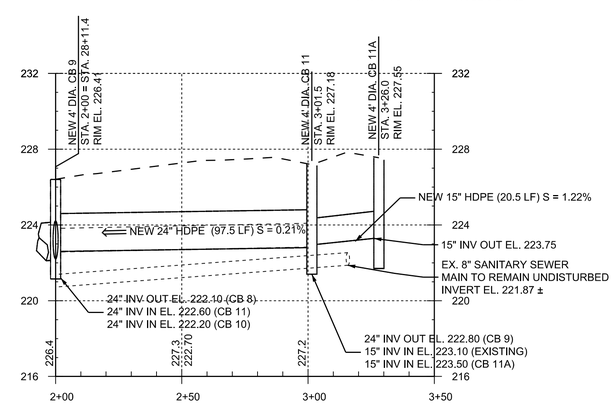

ANDREWS EXTENSION

PROFILE

HORIZONTAL SCALE: 1"= 30'-0"
VERTICAL SCALE: 1"= 4'-0"

30' 20' 10' 0 30'

4' 0 1' 2' 3' 4'

NOTE: PIPE LENTHS ARE PROVIDED FOR GENERAL INFORMATION. PIPE LENGTHS SHALL BE FIELD VERIFIED BASED ON ACTURAL STRUCTURE PLACEMENT

US Army Corps of Engineers
New York District

MARK	DESCRIPTION	DATE	APPR.	MARK	DESCRIPTION	DATE	APPR.

DESIGNED BY: CJK | DATE: MAY 2015
DWN BY: AS | CKD BY: MTM | SOLICITATION NO.:
SUBMITTED BY: D & K | CONTRACT NO.:
FILE NAME: ...\DGN\120808LH_C-105.dgn
SIZE: ANSI D | PLOTTED BY: DUBOIS & KING | PLOT DATE: 5/11/2015

U. S. ARMY ENGINEER DISTRICT
NEW YORK
http://www.nan.usace.army.mil

DuBois & King INC.

LAUREL HILL
STORM WATER IMPROVEMENTS
SOUTH BURLINGTON, VERMONT

STORM DRAIN MAINLINE
SITE PLAN AND PROFILE
STA. 24+50 TO STA. 28+42

SHEET REFERENCE NUMBER
C-105

SHEET 08 OF 15

Submitted by: DUBOIS & KING
...\DGN\120808LH_C-105.dgn
Plot Date: 5/11/2015 2:17:36 PM

MAY 2010 NYD A/E BORDER

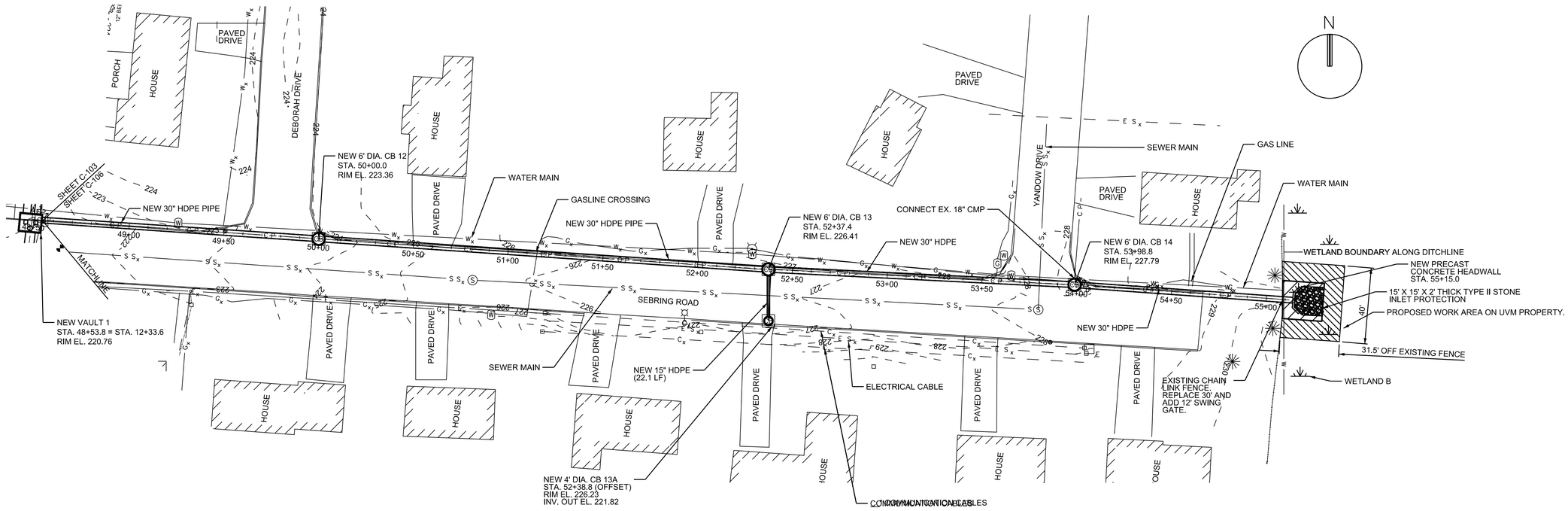

SITE PLAN

30' 20' 10' 0 30'

SCALE: 1"= 30'-0"

NOTE:

1. UNKNOWN NUMBER AND LOCATION OF BASEMENT DRAIN LINES EXIST. CONTRACTOR TO TIE BASEMENT DRAINS TO STORM DRAINAGE STRUCTURES, SEE STORM DRAIN MANHOLE DETAIL

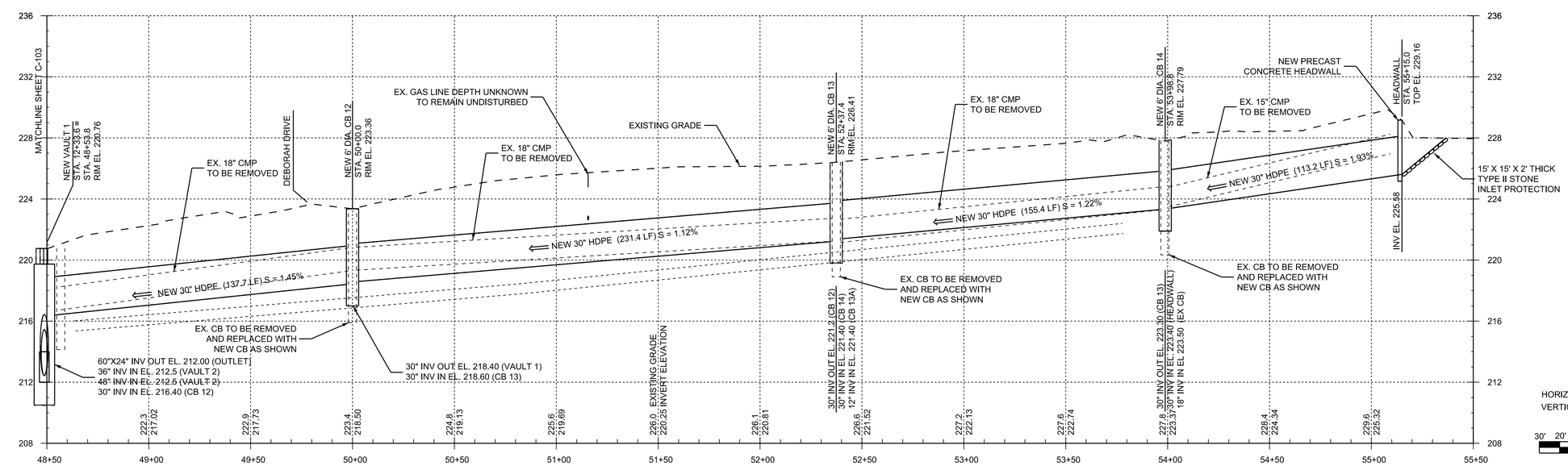

PROFILE

HORIZONTAL SCALE: 1"= 30'-0"

VERTICAL SCALE: 1"= 4'-0"

30' 20' 10' 0 30'

4' 0 1' 2' 3' 4'

NOTE: PIPE LENTHS ARE PROVIDED FOR GENERAL INFORMATION. PIPE LENGTHS SHALL BE FIELD VERIFIED BASED ON ACTURAL STRUCTURE PLACEMENT

US Army Corps of Engineers New York District

MARK	DESCRIPTION	DATE	APPR.	MARK	DESCRIPTION	DATE	APPR.

DESIGNED BY: CJK | DATE: MAY 2015
DWN BY: AS | CKD BY: MTM | SOLICITATION NO.:
SUBMITTED BY: D & K | CONTRACT NO.:
FILE NAME: ...\DGN\120808LH_C-106.dgn
SIZE: ANSI D | PLOTTED BY: DUBOIS & KING | PLOT DATE: 5/11/2015

U. S. ARMY ENGINEER DISTRICT
NEW YORK
http://www.nan.usace.army.mil

DuBois & King INC.

LAUREL HILL
STORM WATER IMPROVEMENTS
SOUTH BURLINGTON, VERMONT

SEBRING DRIVE STORMDRAIN
SITE PLAN AND PROFILE
STA. 48+50 TO STA. 55+50

SHEET REFERENCE NUMBER
C-106

SHEET 09 OF 15

Submitted by: DUBOIS & KING Plot Date: 5/11/2015 2:18:26 PM
...\DGN\120808LH_C-106.dgn

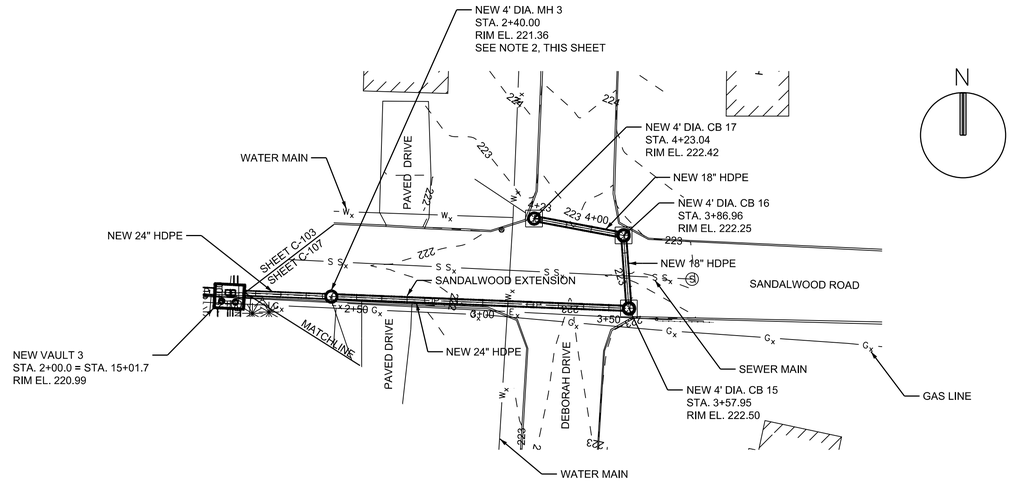

SITE PLAN

30' 20' 10' 0 30'

SCALE: 1"= 30'-0"

NOTE:

1. UNKNOWN NUMBER AND LOCATION OF BASEMENT DRAIN LINES EXIST. CONTRACTOR TO TIE BASEMENT DRAINS TO STORM DRAINAGE STRUCTURES, SEE STORM DRAIN MANHOLE DETAIL

2. NEW MH 3 IS INTENDED TO PROVIDE A LOCATION TO CONNECT POSSIBLE EXISTING YARD DRAIN AND/OR FOUNDATION DRAIN FROM ADJACENT HOUSE. CONTRACTOR SHALL CONFIRM EXISTENCE OF THE DRAIN. IF DRAIN DOES NOT EXIST, MH 3 SHALL BE RELOCATED IN THE FIELD TO STA 2+80.0 WITH ELEVATIONS ADJUSTED UPWARD BY 0.40 FEET.

LEGEND (EXISTING)

- WETLANDS
- 8" APPLE, 20" PINE — TREES
- LIGHT POLE
- SEWER MANHOLE
- CATCH BASIN
- WATER SHUT OFF
- GAS SHUT OFF
- ELECTRICAL BOX
- HORIZONTAL VERTICAL CONTROL
- BM EL. 221.46 — BENCHMARK
- EDGE OF PAVEMENT
- S S$_x$ — SEWER MAIN
- C P — STORM DRAIN
- W$_x$ — WATER MAIN
- C$_x$ — UNDERGROUND COMMUNICATIONS
- E$_x$ — OVERHEAD ELECTRICAL
- E S$_x$ — BURRIED ELECTRICAL
- G$_x$ — UNDERGROUND NATURAL GAS
- FENCE
- W — WETLAND BOUNDARY

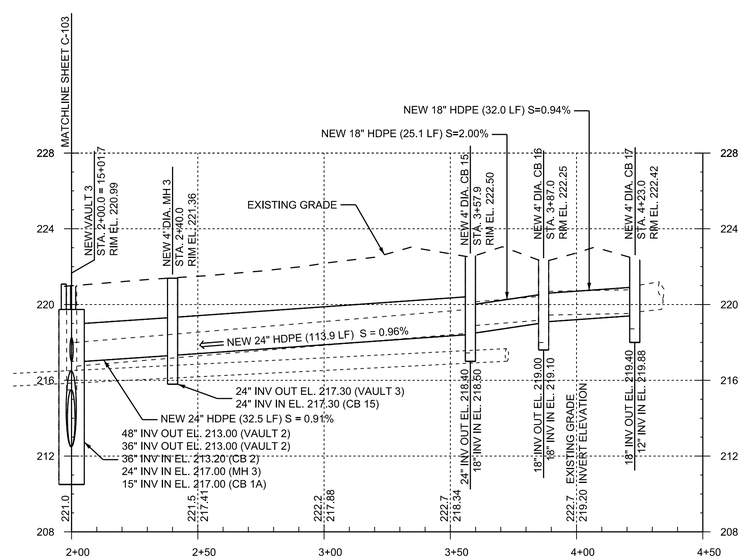

SANDALWOOD EXTENSION

NOTE: PIPE LENTHS ARE PROVIDED FOR GENERAL INFORMATION. PIPE LENGTHS SHALL BE FIELD VERIFIED BASED ON ACTURAL STRUCTURE PLACEMENT

PROFILE

HORIZONTAL SCALE: 1"= 30'-0"
VERTICAL SCALE: 1"= 4'-0"

30' 20' 10' 0 30'

4' 0 1' 2' 3' 4'

US Army Corps of Engineers New York District

MARK	DESCRIPTION	DATE	APPR.	MARK	DESCRIPTION	DATE	APPR.

DESIGNED BY: CJK | DATE: MAY 2015
DWN BY: AS | CKD BY: MTM | SOLICITATION NO.:
SUBMITTED BY: D & K | CONTRACT NO.:
FILE NAME: ...\DGN\120808LH_C-107.dgn
SIZE: ANSI D | PLOTTED BY: DUBOIS & KING | PLOT DATE: 5/11/2015

U. S. ARMY ENGINEER DISTRICT NEW YORK
http://www.nan.usace.army.mil

DuBois & King inc.

LAUREL HILL
STORM WATER IMPROVEMENTS
SOUTH BURLINGTON, VERMONT

SANDALWOOD ROAD
SITE PLAN AND PROFILES
DETENTION AND EXTENSION

SHEET REFERENCE NUMBER
C-107
SHEET 10 OF 15

MAY 2010 NYD A/E BORDER
Submitted by: DUBOIS & KING Plot Date: 5/11/2015 2:19:05 PM
...\DGN\120808LH_C-107.dgn

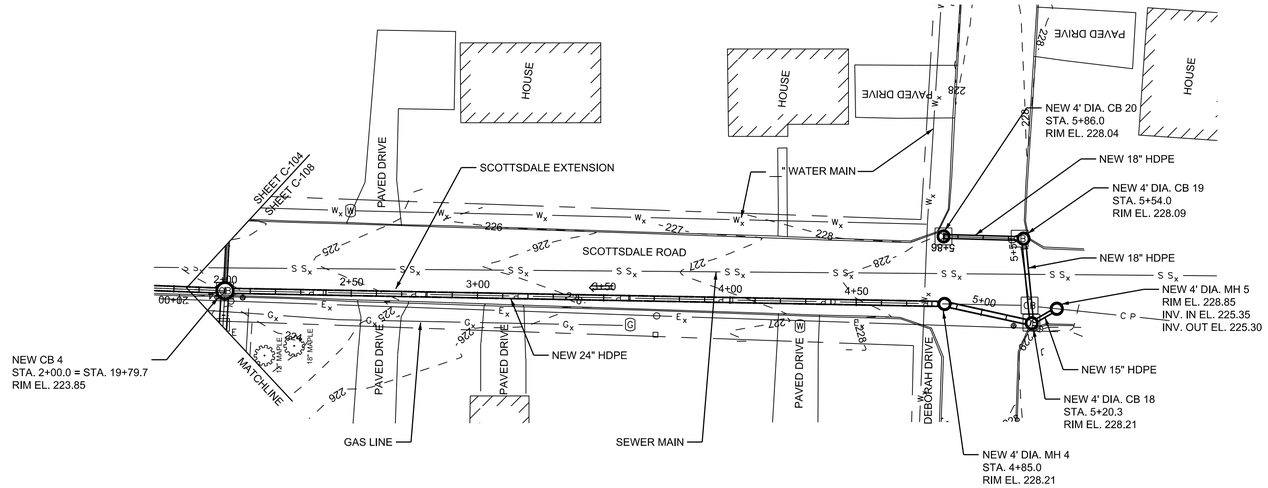

SITE PLAN

30' 20' 10' 0 30'

SCALE: 1"= 30'-0"

NOTE:

1. UNKNOWN NUMBER AND LOCATION OF BASEMENT DRAIN LINES EXIST. CONTRACTOR TO TIE BASEMENT DRAINS TO STORM DRAINAGE STRUCTURES, SEE STORM DRAIN MANHOLE DETAIL

LEGEND (EXISTING)

- WETLANDS
- 6" APPLE / 20" PINE — TREES
- LIGHT POLE
- SEWER MANHOLE
- CB — CATCH BASIN
- W — WATER SHUT OFF
- GAS SHUT OFF
- ELECTRICAL BOX
- HORIZONTAL VERTICAL CONTROL
- BM EL. 221.46 — BENCHMARK
- EDGE OF PAVEMENT
- $S\ S_x$ — SEWER MAIN
- C P — STORM DRAIN
- W_x — WATER MAIN
- C_x — UNDERGROUND COMMUNICATIONS
- E_x — OVERHEAD ELECTRICAL
- $E\ S_x$ — BURRIED ELECTRICAL
- G_x — UNDERGROUND NATURAL GAS
- FENCE
- W — WETLAND BOUNDARY
- PROPERTY BOUNDARY
- RIGHT OF WAY

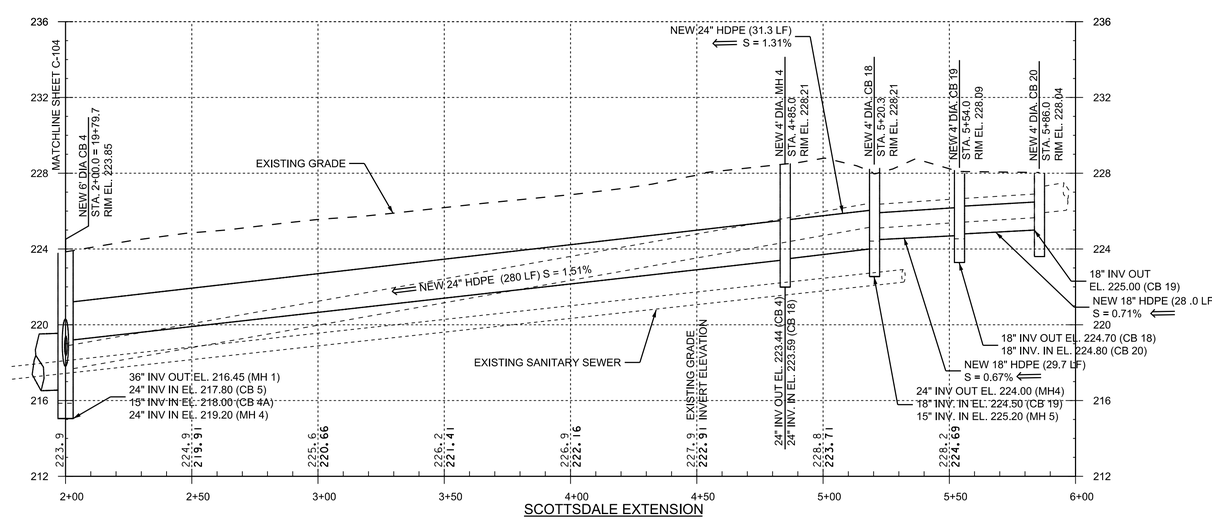

SCOTTSDALE EXTENSION

NOTE: PIPE LENTHS ARE PROVIDED FOR GENERAL INFORMATION. PIPE LENGTHS SHALL BE FIELD VERIFIED BASED ON ACTURAL STRUCTURE PLACEMENT

PROFILE

HORIZONTAL SCALE: 1"= 30'-0"
VERTICAL SCALE: 1"= 4'-0"

30' 20' 10' 0 30'

4' 0 1' 2' 3' 4'

US Army Corps of Engineers
New York District

MARK	DESCRIPTION	DATE	APPR.	MARK	DESCRIPTION	DATE	APPR.

U. S. ARMY ENGINEER DISTRICT
NEW YORK
http://www.nan.usace.army.mil

DESIGNED BY: CJK | DATE: MAY 2015
DWN BY: AS | CKD BY: MTM | SOLICITATION NO.:
SUBMITTED BY: D & K | CONTRACT NO.:
FILE NAME: ...\DGN\120808LH_C-108.dgn
SIZE: ANSI D | PLOTTED BY: DUBOIS & KING | PLOT DATE: 5/11/2015

DuBois & King INC.

LAUREL HILL
STORM WATER IMPROVEMENTS
SOUTH BURLINGTON, VERMONT

SCOTTSDALE ROAD
SITE PLAN AND PROFILES
DETENTION AND EXTENSION

SHEET REFERENCE NUMBER
C-108
SHEET 11 OF 15

MAY 2010 NYD A/E BORDER

Submitted by: DUBOIS & KING
...\DGN\120808LH_C-108.dgn
Plot Date: 5/11/2015 2:20:01 PM

MAY 2010 NYD A/E BORDER

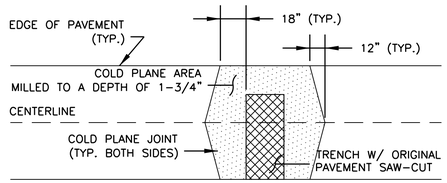

TRANSVERSE PATCH MORE THAN HALF THE WIDTH OF TRAVEL LANE

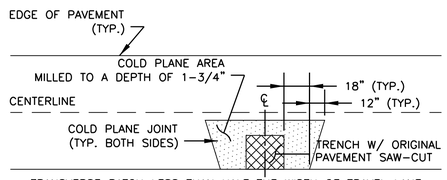

TRANSVERSE PATCH LESS THAN HALF THE WIDTH OF TRAVEL LANE

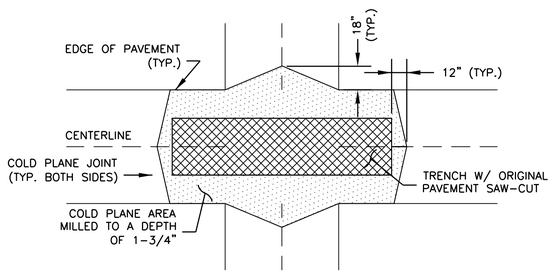

INTERSECTION PATCH

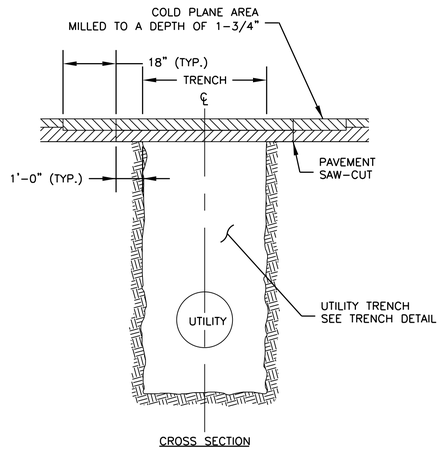

CROSS SECTION

NOTES:

1. PRIOR TO ALL TRENCH EXCAVATIONS EXISTING PAVEMENT SHALL BE SAW-CUT. ANY UNDERMINED AREAS THAT INADVERTENTLY DEVELOP DURING CONSTRUCTION ACTIVITIES SHALL BE REPAIRED.
2. TRENCH BACKFILL SHALL BE IN ACCORDANCE TO ASSOCIATED UTILITY REQUIREMENTS.
3. A TEMPORARY 3-INCH DEPTH OF NHDOT 304.11 HOT BITUMINOUS MATERIAL SHALL BE PLACED IN TWO (2) 1-1/2" LIFTS. TEMPORARY PATCH SHALL CURE FOR 30-DAYS.
4. AFTER PAVEMENT CURE PERIOD HAS BEEN COMPLETED, PAVEMENT AREA SHALL BE MILLED TO A DEPTH OF 1-3/4" IN ACCORDANCE TO THE PLAN LAYOUTS PROVIDING A MINIMUM 18" OVERLAP ONTO EXISTING UNDISTURBED PAVEMENT.
5. TACK ALL PAVEMENT EDGES PRIOR TO PLACEMENT OF PERMANENT BITUMINOUS MATERIAL.
6. PLACE 1-3/4" OF NHDOT 304.11 HOT BITUMINOUS MATERIAL.

PAVEMENT REPAIR DETAIL

NOT TO SCALE

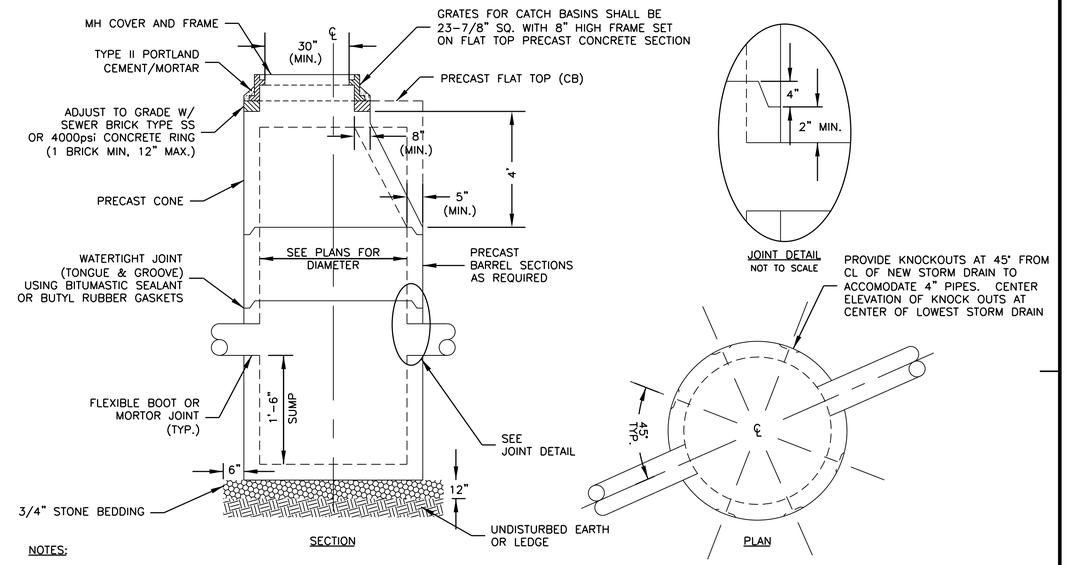

NOTES:

1. PRECAST SECTIONS SHALL BE 5" THICK WITH 0.12 SQ.IN/LF AREA OF STEEL REINFORCEMENT OR 8" THICK UNREINFORCED.
2. PRECAST SECTIONS SHALL MEET HS-20 LOADING, CONSIST OF CONCRETE THAT IS A MINIMUM OF 4000psi @28 DAYS AND SHALL BE MANUFACTURED IN ACCORDANCE WITH ASTM C-478; LATEST REVISION.
3. SEE PLANS FOR STRUCTURE SIZES.

CATCH BASIN/DRAIN MANHOLE DETAIL

NOT TO SCALE

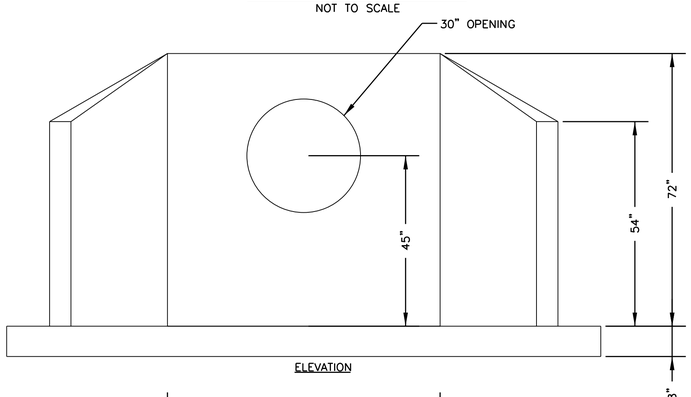

ELEVATION

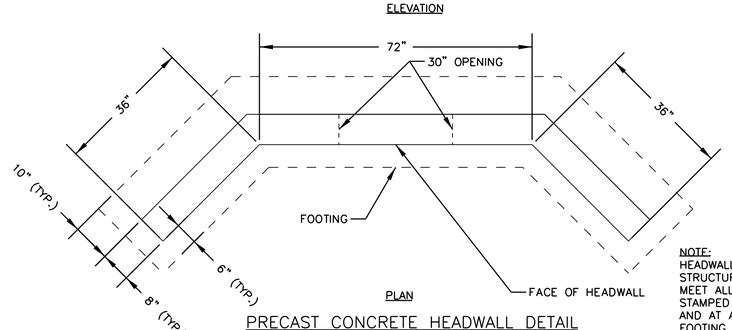

PLAN

NOTE:
HEADWALL DETAIL PROVIDED FOR DIMENSIONAL INFORMATION ONLY. A PRECAST STRUCTURE SHALL BE PROVIDED AND DESIGNED BY PRECAST SUPPLIER TO MEET ALL APPROPRIATE CODES AND STANDARDS. SUBMITTAL THAT IS STAMPED BY A PROFESSIONAL ENGINEER LICENSED IN VERMONT IS REQUIRED AND AT A MINIMUM, SHALL INCLUDE DETAILS OF HEADWALL, WINGWALLS, FOOTING, AND PENETRATIONS.

PRECAST CONCRETE HEADWALL DETAIL

NOT TO SCALE

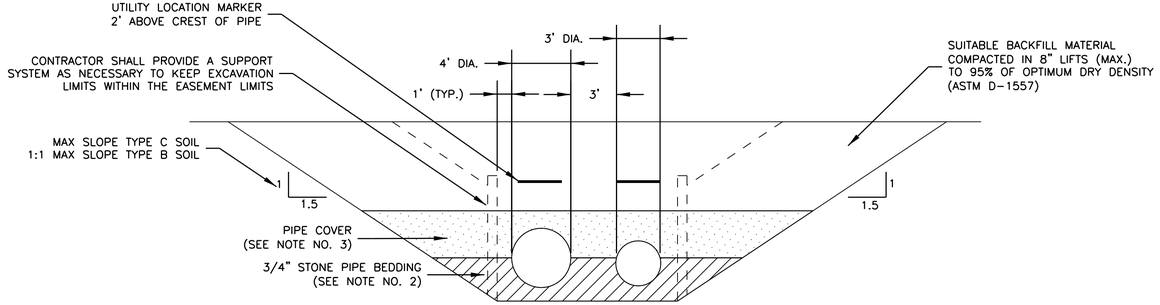

NOTE:
THESE TRENCH DETAILS ARE APPLICABLE TO SINGLE PIPE INSTALLATIONS

NOTES:

1. ALL EXCAVATION MUST MEET OSHA STANDARDS.
2. BEDDING MATERIAL SHALL BE FULL WIDTH OF TRENCH. BEDDING MATERIAL SHALL BE 6" BELOW PIPE (IN EARTH) OR 12" BELOW PIPE (IN LEDGE) UP TO SPRING LINE OF PIPE.
3. PIPE COVER MATERIAL SHALL BE FULL WIDTH OF TRENCH FROM SPRING LINE UP TO 12" (MINIMUM) ABOVE CREST OF PIPE. PIPE COVER MATERIAL SHALL BE SCREENED GRAVEL
4. CONTRACTOR MUST PROTECT EXISTING STRUCTURES, TREES, OR OTHER ITEMS THAT ARE PRESENT BETWEEN THE PERMANENT AND TEMPORARY EASEMENT LIMITS.
5. WHERE REASONABLY POSSIBLE, THE CONTRACTOR SHALL UTILIZE A TRENCH SUPPORT SYSTEM TO MINIMIZE EXCAVATION

PIPE TRENCH DETAILS

NOT TO SCALE

US Army Corps of Engineers
New York District

MARK	DESCRIPTION	DATE	APPR.	MARK	DESCRIPTION	DATE	APPR.

DESIGNED BY: CJK | DATE: MAY 2015
DWN BY: AS | CKD BY: MTM | SOLICITATION NO.:
SUBMITTED BY: D & K | CONTRACT NO.:
FILE NAME: ...\DGN\120808LH_C-501.dgn
SIZE: ANSI D | PLOTTED BY: DUBOIS & KING | PLOT DATE: 5/11/2015

U. S. ARMY ENGINEER DISTRICT
NEW YORK
http://www.nan.usace.army.mil

DuBois & King inc.

LAUREL HILL
STORM WATER IMPROVEMENTS
SOUTH BURLINGTON, VERMONT

STORM DRAIN DETAILS

SHEET REFERENCE NUMBER
C-501
SHEET 12 OF 15

Submitted by: DUBOIS & KING
...\DGN\120808LH_C-501.dgn
Plot Date: 5/11/2015 2:20:42 PM

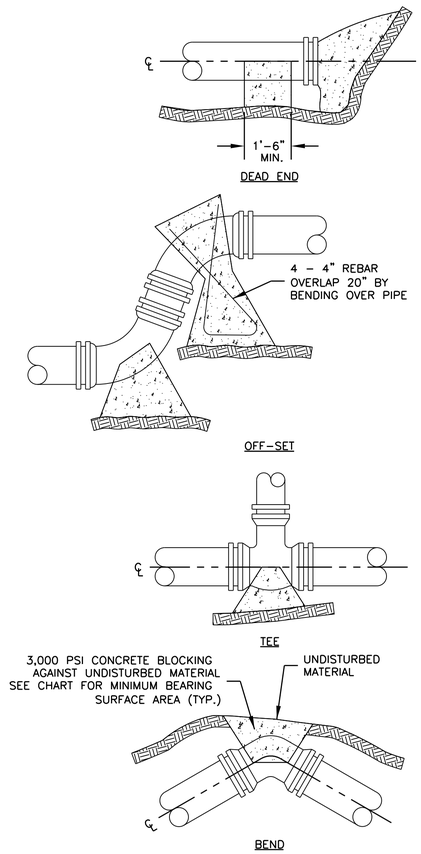

CAST-IN-PLACE CONCRETE THRUST BLOCK BEARING SURFACE AREA TABLE (S.F.)			
PIPE SIZE (IN)	SOFT WET CLAY, SAND OR SILT	DRY SAND	COMPACT COARSE SAND OR GRAVEL HARDPAN
DEAD END OR TEE			
2	2	2	2
4	4	2	2
6	9	5	3
8	16	8	5
10	24	12	8
12	34	17	12
¼ BEND			
2	2	2	2
4	2	2	2
6	4	2	2
8	7	4	3
10	10	5	4
12	15	7	5
⅛ BEND			
2	2	2	2
4	2	2	2
6	2	2	2
8	3	2	2
10	5	3	2
12	7	4	3
1/16 BEND			
2	2	2	2
4	2	2	2
6	2	2	2
8	2	2	2
10	3	2	2
12	4	2	2

WATER MAIN THRUST BLOCK DETAIL

NOT TO SCALE

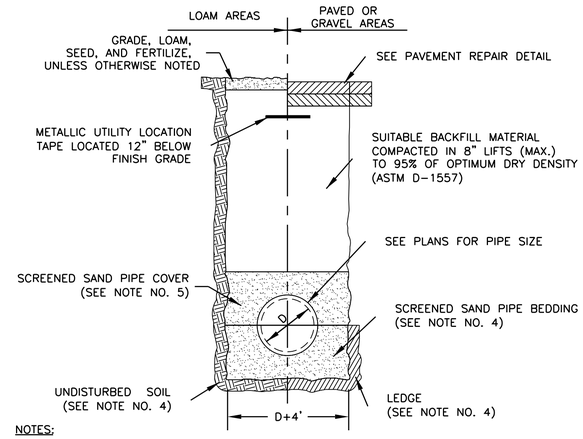

NOTES:

1. ALL MATERIALS SHALL MEET APPLICABLE AWWA SPECIFICATIONS
2. ALL EXCAVATION MUST MEET OSHA STANDARDS
3. PIPE DIAMETERS EQUAL TO OR LESS THAN 2-INCHES SHALL BE TYPE "K" COPPER TUBING. PIPE DIAMETERS GREATER THAN 2-INCHES SHALL BE DUCTILE IRON PIPE CLASS 52.
4. BEDDING MATERIAL SHALL BE FULL WIDTH OF TRENCH. BEDDING MATERIAL SHALL BE 6" BELOW PIPE (IN EARTH) OR 12" BELOW PIPE (IN LEDGE) UP TO SPRING LINE OF PIPE.
5. SAND COVER/CUSHION MATERIAL SHALL BE FULL WIDTH OF TRENCH. SAND MATERIAL SHALL BE FROM SPRING LINE UP TO 12" (MINIMUM) ABOVE CREST OF PIPE.
6. ALL WATER MAINS AND SERVICES SHALL MAINTAIN A MINIMUM COVER OF 5'-6". IN THE EVENT THAT MINIMUM COVER IS NOT FEASIBLE, PIPE SHALL BE INSULATED WITH A MINIMUM OF 2" RIGID WRAP-AROUND INSULATION WITH PVC JACKET

WATER MAIN/SERVICE PIPE TRENCH DETAIL

NOT TO SCALE

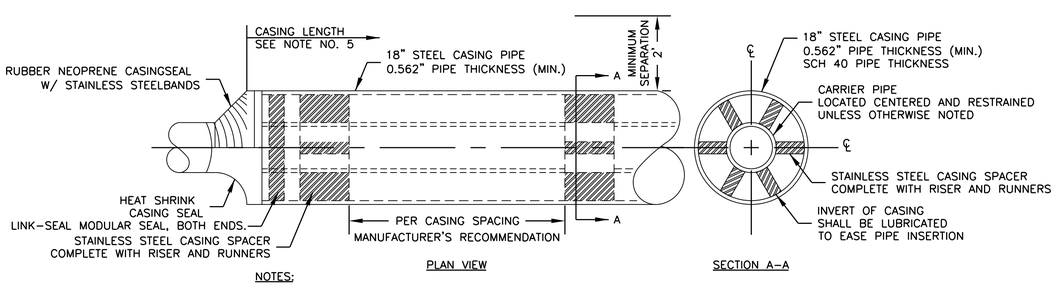

NOTES:

1. ALL EXCAVATION MUST MEET OSHA STANDARDS.
2. PIPE LEAKAGE TESTING SHALL COMPLY WITH LOCAL OR STATE REGULATIONS, WHICHEVER IS MORE STRICT.
3. RUBBER NEOPRENE CASING SEAL WITH STAINLESS STEEL BANDS OR HEAT SHRINK CASING SEAL ARE ACCEPTABLE. INSTALLATION SHALL FOLLOW MANUFACTURER'S RECOMMENDATION TO PROVIDE A WATER-TIGHT SEAL.
4. CASING PIPE LENGTH SHALL BE CALCULATED AS FOLLOWS: OUTSIDE PIPE DIAMETER (OD)+ [2 x (1.5 x MIN. SEPARATION)] + 12" OR AS IDENTIFIED ON PLANS, WHICHEVER IS GREATER

UTILITY CASING DETAIL

NOT TO SCALE

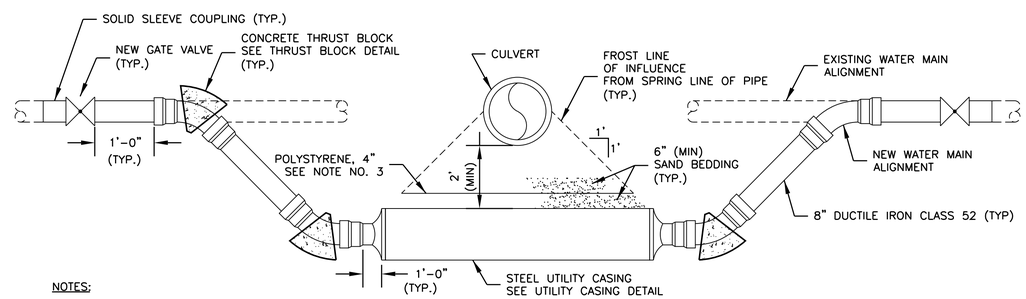

NOTES:

1. ALL EXCAVATION MUST MEET OSHA STANDARDS.
2. WATER PIPE LEAKAGE TESTING SHALL COMPLY WITH LOCAL OR STATE REGULATIONS, WHICHEVER IS MORE STRICT.
3. POLYSTYRENE RIGID INSULATION SHALL BE INSTALLED WHEN CASING/CULVERT SEPARATION IS LESS THAN 4'. INSULATION SHALL BE LOCATED 6-INCHES ABOVE CASING PIPE AND EXTEND TO THE LIMITS OF FROST LINE OF INFLUENCE + 12" EITHER SIDE OF O.D. OF CASING.
4. ALL JOINTS TO BE MECHANICALLY RESTRAINED INCLUDING THRUST RESTRAINT RODS BETWEEN GATE VALVES.
5. THE CARRIER PIPE SHALL CONSIST OF A SINGLE PIPE LENGTH WITHIN THE CASING. NO JOINTS WILL BE ALLOWED WITHIN THE CASING.

CULVERT CROSSING/WATER MAIN RELOCATION DETAIL

NOT TO SCALE

US Army Corps of Engineers New York District

MARK	DESCRIPTION	DATE	APPR.	MARK	DESCRIPTION	DATE	APPR.

U.S. ARMY ENGINEER DISTRICT NEW YORK http://www.nan.usace.army.mil

DuBois & King INC.

DESIGNED BY: CJK | DATE: MAY 2015
DWN BY: AS | CKD BY: MTM | SOLICITATION NO.:
SUBMITTED BY: D & K | CONTRACT NO.:
FILE NAME: ...\DGN\12080BLH_C-502.dgn
SIZE: ANSI D | PLOTTED BY: DUBOIS & KING | PLOT DATE: 5/11/2015

LAUREL HILL
STORM WATER IMPROVEMENTS
SOUTH BURLINGTON, VERMONT

WATER RELOCATION DETAILS

SHEET REFERENCE NUMBER
C-502
SHEET 13 OF 15

MAY 2010 NYD A/E BORDER
Submitted by: DUBOIS & KING ...\DGN\12080BLH_C-502.dgn Plot Date: 5/11/2015 2:21:15 PM

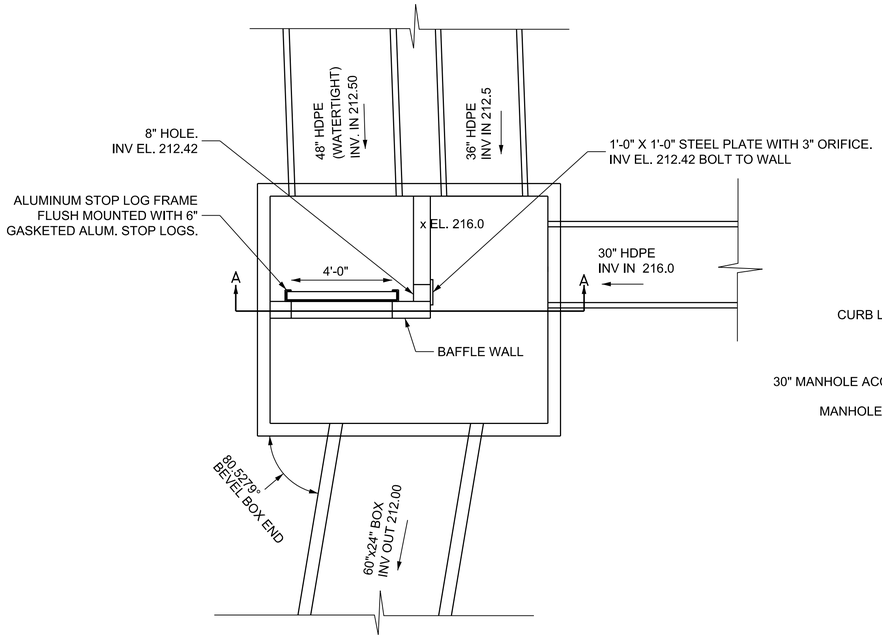

STORMDRAIN STRUCTURE
VAULT 1
INTERIOR PLAN

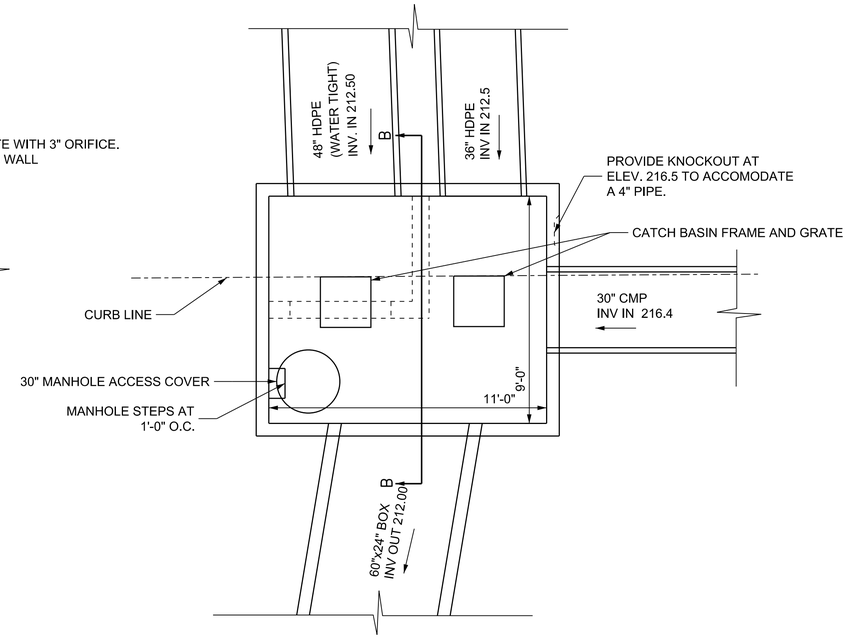

STORMDRAIN STRUCTURE
VAULT 1
PLAN

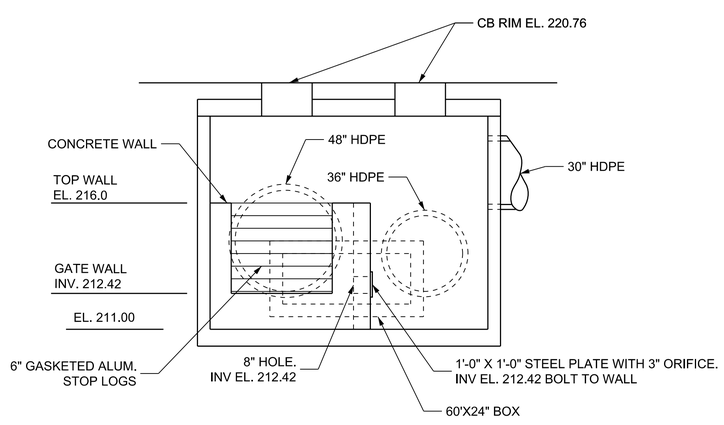

STORMDRAIN STRUCTURE
VAULT 1
SECTION A–A

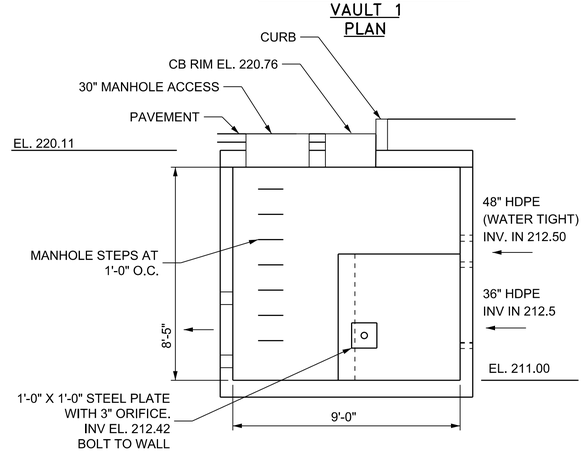

STORMDRAIN STRUCTURE
VAULT 1
SECTION B–B

3' 2' 1' 0 3'
SCALE

NOTES:

1. VAULT 1 SHALL BE A PRECAST CONCRETE STRUCTURE CAPABLE OF SUPPORTING A H20 LOADING.

2. ALL JOINTS INCLUDING PIPE ENTRYS SHALL BE WATERTIGHT.

3. SUBMITTAL REQUIRED.

US Army Corps
of Engineers
New York District

MARK	DESCRIPTION	DATE	APPR.	MARK	DESCRIPTION	DATE	APPR.

DESIGNED BY: CJK | DATE: MAY 2015
DWN BY: AS | CKD BY: MTM | SOLICITATION NO.:
SUBMITTED BY: D & K | CONTRACT NO.:
FILE NAME: ...\DGN\120808LH_C-503.dgn
SIZE: ANSI D | PLOTTED BY: DUBOIS & KING | PLOT DATE: 5/11/2015

U. S. ARMY ENGINEER DISTRICT
NEW YORK
http://www.nan.usace.army.mil

DuBois & King inc.

LAUREL HILL
STORM WATER IMPROVEMENTS
SOUTH BURLINGTON, VERMONT

VAULT 1
PLAN AND SECTIONS

SHEET
REFERENCE
NUMBER
C-503
SHEET 14 OF 15

MAY 2010 NYD A/E BORDER

Submitted by: DUBOIS & KING
...\DGN\120808LH_C-503.dgn
Plot Date: 5/11/2015 2:21:59 PM

MAY 2010 NYD A/E BORDER

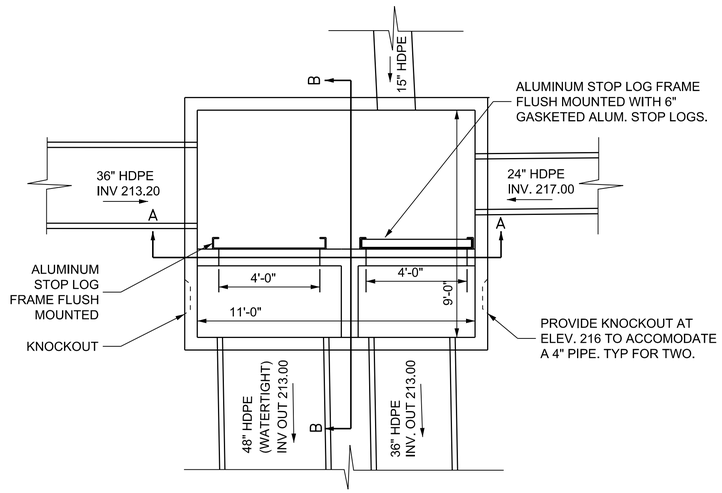

STORMDRAIN STRUCTURE
VAULT 3
INTERIOR PLAN

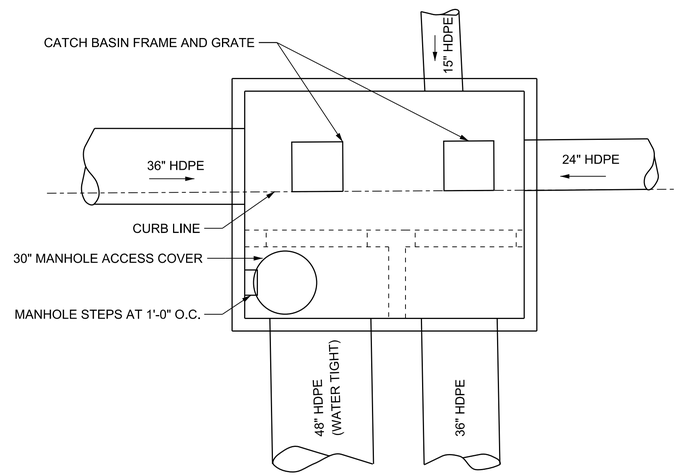

STORMDRAIN STRUCTURE
VAULT 3
PLAN

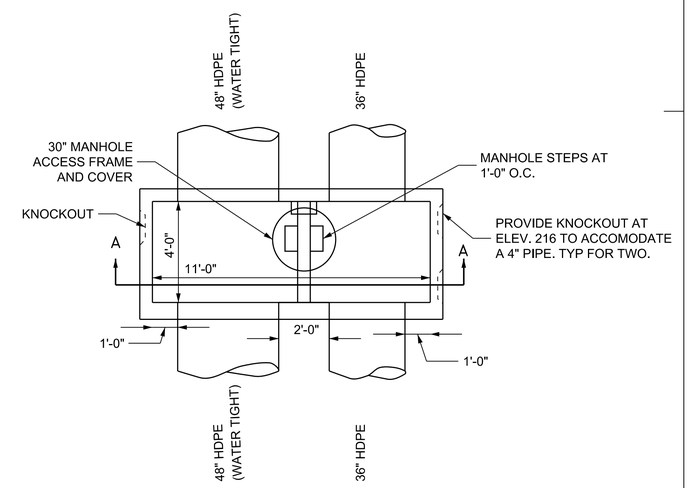

STORMDRAIN STRUCTURE
VAULT 2
PLAN

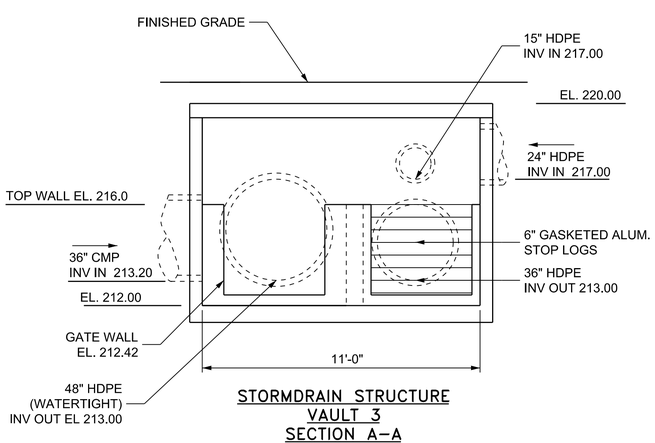

STORMDRAIN STRUCTURE
VAULT 3
SECTION A–A

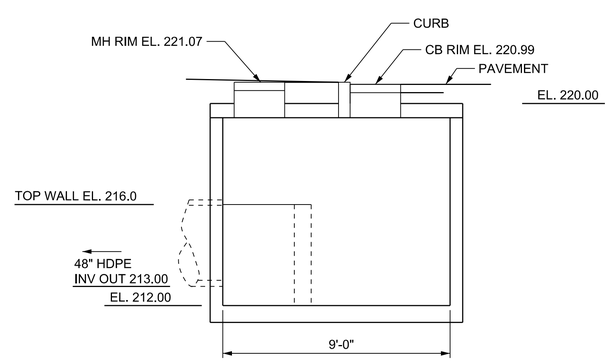

STORMDRAIN STRUCTURE
VAULT 3
SECTION B–B

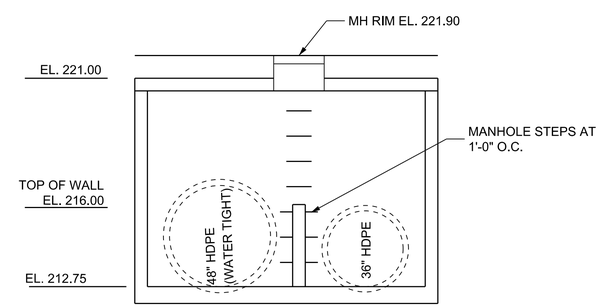

STORMDRAIN STRUCTURE
VAULT 2
SECTION A–A

NOTES:

1. VAULT 1 SHALL BE A PRECAST CONCRETE STRUCTURE CAPABLE OF SUPPORTING A H20 LOADING.

2. ALL JOINTS INCLUDING PIPE ENTRYS SHALL BE WATERTIGHT.

3. SUBMITTAL REQUIRED.

3' 2' 1' 0 3'
SCALE

US Army Corps of Engineers
New York District

MARK	DESCRIPTION	DATE	APPR.	MARK	DESCRIPTION	DATE	APPR.

DESIGNED BY: CJK | DATE: MAY 2015
DWN BY: AS | CKD BY: MTM | SOLICITATION NO.:
SUBMITTED BY: D & K | CONTRACT NO.:
FILE NAME: ...\DGN\120808LH_C-504.dgn
SIZE: ANSI D | PLOTTED BY: DUBOIS & KING | PLOT DATE: 5/11/2015

U. S. ARMY ENGINEER DISTRICT
NEW YORK
http://www.nan.usace.army.mil

DuBois & King inc.

LAUREL HILL
STORM WATER IMPROVEMENTS
SOUTH BURLINGTON, VERMONT

VAULT 2 & VAULT 3
PLAN AND SECTIONS

SHEET REFERENCE NUMBER
C-504
SHEET 15 OF 15

Submitted by: DUBOIS & KING
...\DGN\120808LH_C-504.dgn
Plot Date: 5/11/2015 2:22:42 PM